STANDARD

ANSI/AMCA Standard 210-16/ ASHRAE Standard 51-16

Laboratory Methods of Testing Fans for Certified Aerodynamic Performance Rating

An American National Standard
Approved by ANSI on August 26, 2016

This standard in English, Chinese, European Spanish, and Latin American Spanish may be purchased at www.amca.org/store.

Air Movement and Control Association International

AMCA Corporate Headquarters
30 W. University Drive, Arlington Heights, IL 60004-1893, USA
communications@amca.org ▪ Ph: +1-847-394-0150 ▪ www.amca.org

© 2016 AMCA International and ASHRAE

ANSI/AMCA Standard 210-16
ANSI/ASHRAE Standard 51-16

Laboratory Methods of Testing Fans for Certified Aerodynamic Performance Rating

Air Movement and Control Association International
30 W. University Drive
Arlington Heights, Illinois
60004

American Society of Heating,
Refrigerating and Air Conditioning Engineers
1791 Tullie Circle, NE
Atlanta, GA
30329-2305

AMCA Publications

Authority

AMCA Standard 210-16 was adopted by the membership of the Air Movement and Control Association International Inc. on July 20, 2016 and by ASHRAE on June 29, 2016. It was approved by the American National Standards Institute on August 26, 2016.

Copyright

© 2016 by Air Movement and Control Association International Inc.

All rights reserved. Reproduction or translation of any part of this work beyond that permitted by Sections 107 and 108 of the United States Copyright Act without the permission of the copyright owner is unlawful. Requests for permission or further information should be addressed to the executive director, Air Movement and Control Association International Inc. at 30 West University Drive, Arlington Heights, IL 60004-1893 U.S.

Objections

Air Movement and Control Association International Inc. will consider and take action upon all written complaints regarding its standards, certification programs or interpretations thereof. For information on procedures for submitting and handling complaints, write to

Air Movement and Control Association International
30 West University Drive
Arlington Heights, IL 60004-1893 U.S.A.
AMCA International Incorporated

European AMCA
Avenue des Arts, numéro 46
à Bruxelles (1000 Bruxelles)

Asia AMCA Sdn Bhd
No. 7, Jalan SiLC 1/6,
Kawasan Perindustrian SiLC Nusajaya,
Mukim Jelutong, 79200 Nusajaya, Johor
Malaysia

Disclaimer

AMCA uses its best efforts to produce publications for the benefit of the industry and the public in light of available information and accepted industry practices. However, AMCA does not guarantee, certify or assure the safety or performance of any products, components or systems tested, designed, installed or operated in accordance with AMCA publications or that any tests conducted under its publications will be non-hazardous or free from risk.

Review Committee

Tim Mathson, Committee Chair	Greenheck
John Cermak, PhD	Acme Engineering
David Johnson	Berner International Corp.
Brian Merritt	Climatic Testing Systems Inc.
Franco Cincotti	Comefri USA Inc.
Swee Hock Lawrence Ang	DongGuan Wolter Chemco Ventilation Ltd
Armin Hauer	ebm-papst Inc.
Fernando A. Ruiz C.	Equipos Electromecanicos, S.A. de C.V.
Mohamed Farag	Egyptian Swedish Air Conditioning Co. S.A.E.
Kim Osborn	Nortek Air Solutions
Dr. John Murphy	Jogram Inc.
Dan Hake	Lau Industries Inc.
Charles Gans	LSB Climate Solutions
Sham Morten Gabr	Multi-Wing
Z. Patrick Chinoda	Revcor, Inc.
Edward Hucko	Robinson Fans Inc.
David Ortiz Gomez	Soler & Palau, S.A. de C.V.
Rad Ganesh	Twin City Fan Companies Ltd.
Paul W. Okeley	The New York Blower Company
Charles W. Coward, Jr.	Waddell Inc.
Yong Ning Chen	Zhejiang Yilida Ventilator Co. Ltd.
Roberto Arias Alvarez	Zitron, S.A.
Mark Stevens	AMCA Staff
Tim Orris	AMCA Staff

Related AMCA Documents

Related Publications	AMCA Publication 211	*Certified Ratings Program—Product Rating Manual for Fan Air Performance*

Contents

1. Purpose and Scope . . . 1

2. Normative References . . . 1

3. Definitions/Units of Measure/Symbols . . . 1

3.1 Definitions . . . 1

3.2 Units of measure . . . 6

3.3 Symbols and subscripts . . . 7

4. Instruments and Methods of Measurement . . . 7

4.1 Accuracy . . . 7

4.2 Pressure . . . 7

4.3 Airflow rate . . . 9

4.4 Fan input power . . . 10

4.5 Rotational speed . . . 11

4.6 Air density . . . 11

5. Test Setups and Equipment . . . 11

5.1 Setup . . . 11

5.2 Duct . . . 12

5.3 Chamber . . . 13

5.4 Variable air supply and exhaust systems . . . 13

6. Observations and Conduct of Test . . . 14

6.1 General test requirements . . . 14

7. Calculations . . . 15

7.1 Calibration correction . . . 15

7.2 Density and viscosity of air . . . 15

7.3 Fan airflow rate at test conditions . . . 16

7.4 Fan velocity pressure at test conditions . . . 17

7.5 Fan total pressure at test conditions . . . 18

7.6 Fan static pressure at test conditions . . . 20

7.7 Fan input power at test conditions . . . 20

7.8 Fan efficiency . . . 20

7.9 Conversion of results to other rotational speeds and air densities . . . 21

8. Report and Results of Test . . . 22

8.1 Report . . . 22

8.2 Performance graphical representation of test results . . . 22

Annex A Airflow Settling Means Effectiveness Check (Normative) 48
Annex B Chamber Leakage Rate Test Procedure (Informative) 49
Annex C Tubing (Informative) 51
Annex D Derivations of Equations (Informative) 52
Annex E Similarity and Fan Laws (Informative) 55
Annex F Uncertainty Analysis (Informative) 59
Annex G Iterative Procedure (Informative) 67
Annex H Fan Outlet Area (Normative) 68
Annex I General References/Bibliography (Informative) 70

Laboratory Methods of Testing Fans for Certified Aerodynamic Performance Rating

1. Purpose and Scope

This standard establishes uniform test methods for a laboratory test of a fan or other air moving device to determine its aerodynamic performance in terms of airflow rate, pressure developed, power consumption, air density, speed of rotation and efficiency for rating or guarantee purposes.

This standard applies to a fan or other air moving device when air is used as the test gas, with the following exceptions:

(a) air circulating fans (ceiling fans, desk fans);
(b) positive pressure ventilators;
(c) compressors with interstage cooling;
(d) positive displacement machines; and
(e) test procedures to be used for design, production or field testing.

2. Normative References

The following standards contain provisions that, through specific reference in this text, constitute provisions of this American National Standard. At the time of publication, the editions indicated were valid. All standards are subject to revision, and parties to agreements based on this American National Standard are encouraged to investigate the possibility of applying the most recent editions of the standards listed below.

IEEE 112-96 *Standard Test Procedure for Polyphase Induction Motors and Generators*, The Institute of Electrical and Electronic Engineers, 445 Hoes Lane, Piscataway, NJ 08855-1331, U.S.A. (AMCA #1149).

3. Definitions/Units of Measure/Symbols

3.1 Definitions

3.1.1 Fan
A device that uses a power-driven rotating impeller to move air or gas (see note below). The internal energy increase imparted by a fan to air is limited to 25 kJ/kg (10.75 Btu/lbm). This limit is approximately equivalent to a pressure of 30 kPa (120 in. wg) (AMCA 99-0066).

Note: for the purpose of this standard, the term "air" is used in the sense of "gaseous fluid."

3.1.2 Fan inlet and outlet boundaries
The interfaces between a fan and the remainder of the air system; the respective planes perpendicular to an airstream entering or leaving a fan.

Various appurtenances (inlet boxes, inlet vanes, inlet cones, silencers, screens, rain hoods, dampers, discharge cones, evasés, etc.), may be included as part of a fan between the inlet and outlet boundaries.

3.1.3 Fan input power boundary
The interface between a fan and its drive.

When mechanical input power is reported, it is the interface between a fan and its drive, which in this context is either a dynamometer or calibrated motor. When electrical input power is reported, it is the interface between mains and the drive.

3.1.4 Driven fan
A fan equipped with a drive.

3.1.5 Drive
Components used to power the fan, such as a motor, motor control and transmission. Not all of these components are required to constitute a drive. A calibrated motor used to measure fan input power is generally not considered part of the drive.

3.1.6 Transmission
A system that transmits mechanical power from the motor to the fan shaft. Examples of transmissions are belts/sheaves, couplings and gears.

3.1.7 Fan outlet area
The gross inside area measured in the planes of the outlet openings.

3.1.8 Fan inlet area
The gross inside area measured in the planes of the inlet connections. For converging inlets without connection elements, the inlet area shall be considered to be that where a plane perpendicular to the airstream first meets the mouth of the inlet bell or inlet cone.

3.1.9 Dry-bulb temperature
Air temperature measured by a temperature-sensing device without modification to compensate for the effect of humidity (AMCA 99-0066).

3.1.10 Wet-bulb temperature
The air temperature measured by a temperature sensor

covered by a water-moistened wick and exposed to air in motion (AMCA 99-0066).

3.1.11 Wet-bulb depression
The difference between the dry-bulb and wet-bulb temperatures at the same location (AMCA 99-0066).

3.1.12 Stagnation (total) temperature
The temperature that exists by virtue of the internal and kinetic energy of the air.

If the air is at rest, the stagnation (total) temperature will equal the static temperature (AMCA 99-0066).

3.1.13 Static temperature
The temperature that exists by virtue of the internal energy of the air.

If a portion of the internal energy is converted into kinetic energy, the static temperature is decreased accordingly.

3.1.14 Air density
The mass per unit volume of air (AMCA 99-0066).

3.1.15 Standard air
Air with a standard density of 1.2 kg/m^3 (0.075 lbm/ft^3) at a standard barometric pressure of 101.325 kPa (29.92 in. Hg).

3.1.15.1 Standard air properties
Standard air has a ratio of specific heats of 1.4 and a viscosity of 1.8185×10^{-5} Pa•s (1.222×10^{-5} lbm/ft•s). Air at 20°C (68°F) temperature, 50% relative humidity, and standard barometric pressure has the properties of standard air, approximately.

Note: The values of the standard air density in the SI and I-P systems of units are not exactly equivalent. This may have an impact on the accuracy of the fan performance data when the data is shown in both systems of units or converted from one system to the other.

3.1.16 Pressures in the air
The pressures in the air relevant to the fan performance testing have dimension as a force per unit of area. These pressures also have a meaning of specific energy defined as energy per volume of the air or specific power defined as power per unit of the airflow. In either case, the resulting dimension is the same. The pressures in the SI system are expressed in Pa, while in the I-P system they are expressed as inches of water or mercury. The conventional conversion of 1 in. of water equals 249.089 Pa (see note below). Pressures in inches of mercury are referenced to the mercury density of 13595.08 kg/m^3 in the SI system or 848.656 lbm/ft^3 in the I-P system.

Note: This conventional conversion is based on water density of 1000 kg/m^3 in the SI system or 62.427 lbm/ft^3 in the I-P system.

3.1.17 Absolute pressure
The pressure when the datum pressure is absolute zero. It is always positive.

3.1.18 Barometric pressure
The absolute pressure exerted by the atmosphere.

3.1.19 Gauge pressure
The differential pressure when the datum pressure is the barometric pressure at the point of measurement. It may be positive or negative.

3.1.20 Total pressure
The air pressure that exists by virtue of the state of the air and the rate of motion of the air. It is the algebraic sum of velocity pressure and static pressure at a point.

If air is at rest, its total pressure will equal the static pressure.

3.1.21 Dynamic (velocity) pressure
The portion of air pressure that exists by virtue of the rate of motion of the air.

3.1.22 Static pressure
The portion of air pressure that exists by virtue of the state of the air.

If expressed as a gauge pressure, it may be positive or negative.

3.1.23 Pressure loss
A decrease in total pressure due to friction and/or turbulence.

3.1.24 Fan air density
The density of the air corresponding to the total pressure and the stagnation (total) temperature of the air at the fan inlet.

3.1.25 Fan airflow rate
The volumetric airflow rate at fan air density.

3.1.26 Fan total pressure
The difference between the total pressure at the fan outlet and the total pressure at the fan inlet.

3.1.27 Fan dynamic (velocity) pressure
A pressure calculated from the average air velocity and air density at the fan outlet.

3.1.28 Fan static pressure
The difference between the fan total pressure and the fan dynamic (velocity) pressure. Therefore, it is the difference

Table 1
Input Power Boundary

Case	Motor Control	Motor	Transmission	Fan	Boundary	Quantity Measured
1	X	X	X	X	Mains/ Motor Control	W_{cmti}
2		X	X	X	Mains/Motor	W_{mti}
3		X		X	Mains/Motor	W_{mi}
4	X	X		X	Mains/Motor Control	W_{cmi}
5			X	X	Dynamometer or Calibrated Motor/Transmission	H_{ti}
6				X	Dynamometer or Calibrated Motor/Fan	H_i

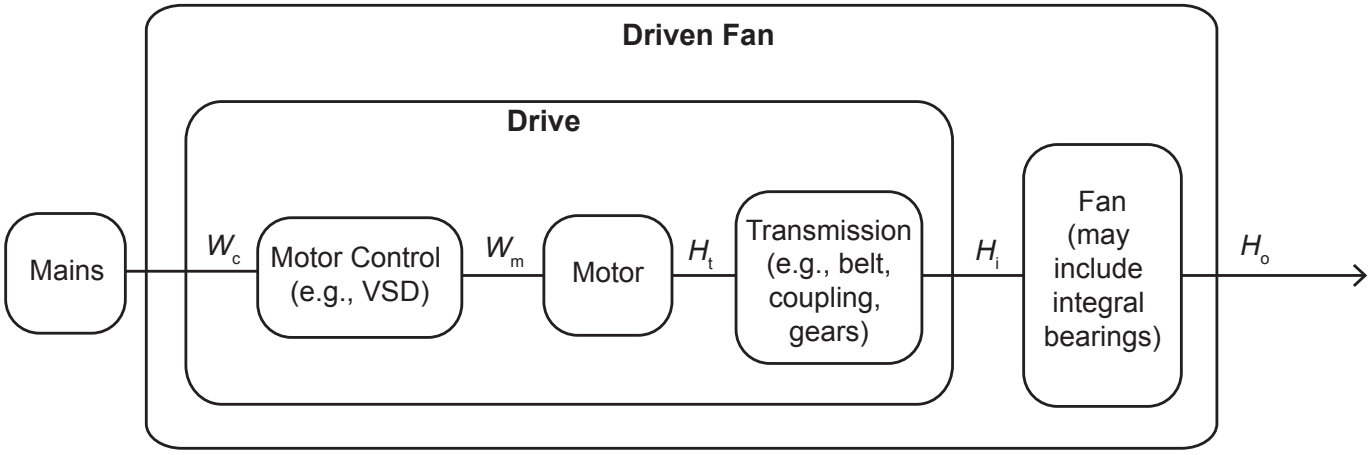

W shall designate electrical input power; the product of voltage and current; and, in the case of an AC circuit, power factor

H shall designate mechanical power, the product of torque and shaft speed when considering input power, and the product of flow and total pressure when considering output power,

Subscripts shall be used in a dynamic sense. For instance,

- W_{mti} indicates a test of an Arrangement 8 fan where motor input power is measured
- H_i indicates a test of an Arrangement 1 fan with a dynamometer
- W_{cmi} indicates a test of an Arrangement 4 fan where motor control input power is measured
-

Figure 3.1
Input Power Boundary

Table 2
Symbols and Subscripts

Symbol	Description	SI Unit	I-P Unit
A	Area of cross section	m^2	ft^2
C	Nozzle discharge coefficient	dimensionless	
D	Diameter and equivalent diameter	m	ft
D_h	Hydraulic diameter	m	ft
e	Base of natural logarithm (2.718…)	dimensionless	
E	Energy factor	dimensionless	
F	Beam load	N	lbf
f	Coefficient of friction	dimensionless	
H_i	Fan input power	W	hp
H_o	Fan output power	W	hp
K_p	Compressibility coefficient	dimensionless	
L	Nozzle throat dimension	m	ft
L_e	Equivalent length of straightener	m	ft
$L_{x,x'}$	Length of duct between planes x and x'	m	ft
l	Length of moment arm	m	in.
ln	Natural logarithm	---	---
M	Chamber diameter or equivalent diameter	m	ft
N	Rotational speed	rpm	rpm
n	Number of readings	dimensionless	
P_s	Fan static pressure	Pa	in. wg
P_{sx}	Static pressure at plane x	Pa	in. wg
P_t	Fan total pressure	Pa	in. wg
P_{tx}	Total pressure at plane x	Pa	in. wg
P_v	Fan velocity pressure	Pa	in. wg
P_{vx}	Velocity pressure at plane x	Pa	in. wg
p_b	Corrected barometric pressure	Pa	in. Hg
p_e	Saturated vapor pressure at t_w	Pa	in. Hg
p_p	Partial vapor pressure	Pa	in. Hg
Q	Fan airflow rate	m^3/s	cfm, ft^3/min
Q_x	Airflow rate at plane x	m^3/s	cfm, ft^3/min
R	Gas constant	J/kg•K	ft•lb/lbm•°R
Re	Reynolds number	dimensionless	
T	Torque	N•m	lbf•in.
t_d	Dry-bulb temperature	°C	°F
t_s	Stagnation (total) temperature	°C	°F
t_w	Wet-bulb temperature	°C	°F
V	Velocity	m/s	fpm, ft/min
W_x	Electrical input power, where x indicates the input power boundary	W	W
x	Function used to determine K_p	dimensionless	
Y	Nozzle expansion factor	dimensionless	
y	Thickness of airflow straightener element	m	ft
z	Function used to determine K_p	dimensionless	
α	Static pressure ratio for nozzles	dimensionless	
σ	Diameter ratio for nozzles	dimensionless	
γ	Ratio of specific heats	dimensionless	
ΔP	Pressure differential	Pa	in. wg
η_m	Motor efficiency	per unit	
η_{sx}	Fan static efficiency where x indicates the input power boundary	per unit	

Table 2 (con't)
Symbols and Subscripts

Symbol	Description	SI Unit	I-P Unit
η_{st}	Fan static efficiency where x indicates the input power boundary	per unit	
μ	Dynamic air viscosity	Pa•s	lbm/ft•s
ρ	Fan air density	Kg/m^3	lbm/ft^3
ρ_x	Air density at plane x	Kg/m^3	lbm/ft^3

Subscript	Description
c	Converted value
r	Reading
x	Plane 0,1,2 … as appropriate
0	Plane 0 (general test area)
1	Plane 1 (fan inlet)
2	Plane 2 (fan outlet)
3	Plane 3 (pitot traverse station)
4	Plane 4 (duct piezometer station)
5	Plane 5 (nozzle inlet station in chamber)
6	Plane 6 (nozzle discharge station)
7	Plane 7 (outlet chamber measurement station)
8	Plane 8 (inlet chamber measurement station)

Power Subscripts

The following subscripts shall be used to designate the type of input power measured and reported during the test, and the losses present that consumed that power.

Subscript	Description
o	Fan output power
i	Fan input power
m	Electrical input power to the motor
c	Electrical input power to the motor control
t	Input power inclusive of the transmission losses
b	Input power inclusive of bearing losses

between static pressure at the fan outlet and total pressure at the fan inlet.

3.1.29 Fan rotational speed
The rotational speed of the impeller.

If the fan has more than one impeller, fan rotational speed is the rotational speed of each impeller.

3.1.30 Compressibility coefficient
The ratio of the mean airflow rate through the fan to the airflow rate at fan air density; the ratio of the fan total pressure that would be developed with an incompressible fluid to the fan total pressure that is developed with a compressible fluid, i.e., air, the test gas.

The compressibility coefficient is a thermodynamic factor that must be applied to determine fan total efficiency from fan airflow rate, fan total pressure, and fan input power. The coefficient is derived in Annex D.

3.1.31 Fan output power
The power delivered to air by the fan; it is proportional to the product of the fan airflow rate, the fan total pressure and the compressibility coefficient.

3.1.32 Fan input power
The mechanical input power to the fan.

3.1.33 Fan total efficiency
The ratio of fan output power to fan input power.

3.1.34 Fan static efficiency
The fan total efficiency multiplied by the ratio of fan static pressure to fan total pressure.

3.1.35 Fan with drive total efficiency
The ratio of fan output power to drive input power.

3.1.36 Fan with drive input power
The electric input power to the drive.

3.1.37 Fan with drive static efficiency
The fan with drive total efficiency multiplied by the ratio of fan static pressure to fan total pressure.

3.1.38 Point of operation
The relative position on a fan characteristic curve corresponding to a particular airflow rate. It is controlled during a test by adjusting the position of a throttling device, by changing flow nozzles or auxiliary fan characteristics, or by any combination of these.

3.1.39 Free delivery
The point of operation where the fan static pressure is zero.

3.1.40 Shall and should
The word *shall* is to be understood as mandatory; the word *should* as advisory.

3.1.41 Shut-off
The point of operation where the fan airflow rate is zero.

3.1.42 Determination
A complete set of measurements for a particular point of operation of a fan.

3.1.43 Test
A series of determinations for various points of operation of a fan.

3.1.44 Energy factor
The ratio of the total kinetic energy of the airflow to the kinetic energy corresponding to the average velocity of the airflow.

3.1.45 Demonstrated accuracy
Demonstrated accuracy is defined for the purposes of this standard as the accuracy of an instrument or the method established by testing of the instrument or the method against a primary or calibrated instrument or method in accordance with the requirements of this standard.

3.2 Units of measure

3.2.1 System of units
SI units (The International System of Units, *Le Systéme International d'Unités*) [1] are the primary units employed in this standard, with I-P units (inch-pound) given as the secondary reference. SI units are based on the fundamental values of the International Bureau of Weights and Measures [2], and I-P values are based on the values of the National Institute of Standards and Technology (NIST), which are in turn based on the values of the International Bureau.

3.2.2 Basic units
The SI unit of length is the meter (m) or the millimeter (mm); the I-P unit of length is the foot (ft) or the inch (in.). The SI unit of mass is the kilogram (kg); the I-P unit of mass is the pound mass (lbm). The unit of time is either the minute (min) or the second (s). The SI unit of temperature is either the degree Celsius (°C) or the degree kelvin (°K); the I-P unit of temperature is either the degree Fahrenheit (°F) or the degree Rankine (°R). The SI unit of force is the newton (N); the I-P unit of force is the pound force (lbf).

3.2.3.1 Airflow rate
The SI unit of volumetric flow rate is the cubic meter per second (m^3/s); the I-P unit of volumetric flow rate is the cubic foot per minute (cfm).

3.2.3.2 Airflow Velocity

The SI unit of velocity is the meter per second (m/s); the I-P unit of velocity is the foot per minute (fpm).

3.2.4 Pressure

The SI unit of pressure is the pascal (Pa); the I-P unit of pressure is either the inch water gauge (in. wg) or the inch mercury (in. Hg). Values in mm Hg or in in. Hg shall be used only for barometric pressure measurements. The standard pressures in the I-P system are based on the standard density of water of 1000 kg/m^3 (62.428 lbm/ft^3) or standard density of mercury of 13595.1 kg/m^3 (848.714 lbm/ft^3) and the standard gravitational acceleration of 9.80665 m/s^2 (32.17405 ft/s^2).

3.2.5 Power, energy and torque

The SI unit of power is the watt (W); the I-P unit is horsepower (hp). The SI unit of energy is the joule (J); the I-P unit is the foot pound-force (ft•lbf). The SI unit of torque is the newton-meter (N•m); the I-P unit is the pound-force inch (lbf•in.).

3.2.6 Efficiency

Efficiency is based on a per unit basis. Percentages are obtained by multiplying by 100.

3.2.7 Rotational speed

The unit of rotational speed is the revolution per minute (rev/min or rpm).

3.2.8 Density, viscosity and gas constant

The SI unit of density is the kilogram per cubic meter (kg/m^3); the I-P unit is the pound mass per cubic foot (lbm/ft^3). The SI unit of viscosity is the pascal second (Pa•s); the I-P unit is the pound mass per foot-second (lbm/ft•s). The SI unit of gas constant is the joule per kilogram kelvin (J/[kg•K]); the I-P unit is the foot pound-force per pound mass degree Rankine ([ft•lb]/[lbm•°R]).

3.2.9 Dimensionless groups

Various dimensionless quantities appear in the text. Any consistent system of units may be employed to evaluate these quantities unless a numerical factor is included, in which case units must be as specified.

3.3 Symbols and subscripts

See Table 2

4. Instruments and Methods of Measurement

4.1 Accuracy [3]

The specifications for instruments and methods of measurement that follow include both instrument accuracy and measurement accuracy requirements and specific examples of equipment capable of meeting those requirements.

Equipment other than the examples cited may be used provided the accuracy requirements are met or improved upon.

4.1.1 Instrument accuracy

The specifications regarding accuracy correspond to two standard deviations based on an assumed normal distribution.

The calibration procedures given in this standard shall be employed in order to minimize errors. Instruments shall be set up, calibrated and read by qualified personnel trained to minimize errors.

4.1.2 Measurement uncertainty

Every test measurement contains some error and the true value cannot be known because the magnitude of the error cannot be determined exactly. However, it is possible to perform an uncertainty analysis to identify a range of values within which the true value probably lies. A probability of 95% has been chosen as acceptable for this standard.

The standard deviation of random errors can be determined by statistical analysis of repeated measurements. No statistical means are available to evaluate systematic errors, so these must be estimated. The estimated upper limit of a systematic error is called the systematic uncertainty, and, if properly estimated, it will contain the true value 99% of the time. The two standard deviation limit of a random error has been selected as the random uncertainty. Two standard deviations yield 95% probability for random errors.

4.1.3 Uncertainty of results

The results of a fan test are the various fan performance variables listed in Sections 3.1.21 through 3.1.31. Each result is based on one or more measurements. The uncertainty in any result can be determined from the uncertainties in the measurement. It is best to determine the systematic uncertainty and then the random uncertainty of the result before combining them into the total uncertainty of the result. This may provide clues on how to reduce the total uncertainty. When the systematic uncertainty is combined in quadrature with the random uncertainty, the total uncertainty will give 95% coverage. In most test situations, it is wise to perform a pretest uncertainties analysis to identify potential problems. A pretest uncertainties analysis is not required for each test covered by this standard because it is recognized that most laboratory tests for rating are conducted in facilities where similar tests are repeatedly run. Nevertheless, a pretest analysis is recommended, as is a post-test analysis. The simplest form of analysis is through verification that all accuracy and calibration requirements of this standard have been met. The most elaborate analysis would consider all of

the elemental sources of error, including those due to calibration, data acquisition, data reduction, calculation assumptions, environmental effects and operational steadiness.

The sample analysis given in Annex F calculates the uncertainty in each of the fan performance variables, and in addition combines certain ones into a characteristic uncertainty and others into an efficiency uncertainty.

4.2 Pressure

The total pressure at a point shall be measured on an indicator such as a manometer with one leg open to atmosphere and the other leg connected to a total pressure sensor, such as the total pressure tube or the impact tap of a pitot-static tube. The static pressure at a point shall be measured on an indicator, such as a manometer, with one leg connected to atmosphere and the other leg connected to a static pressure sensor, such as a static pressure tap or the static tap of a pitot-static tube.

The velocity pressure at a point shall be measured on an indicator, such as a manometer, with one leg open to a total pressure sensor, such as the impact tap of a pitot-static tube, and the other leg connected to a static pressure sensor, such as the static tap of the same pitot-static tube.

The differential pressure between two points shall be measured on an indicator, such as a manometer, with one leg connected to the upstream sensor, such as a static pressure tap, and the other leg connected to the downstream sensor, such as a static pressure tap.

4.2.1 Manometers and other pressure-indicating instruments

Pressure shall be measured on manometers of the liquid column type using inclined or vertical legs or other instrument that provides a maximum uncertainty of 1% of the maximum observed reading during the test or 1 Pa (0.005 in. wg), whichever is larger.

Note: the specification permitting an uncertainty based on the maximum observed test reading during the test leads to combined relative uncertainties in both fan pressure and fan airflow rate that are higher at low values of the fan pressure or fan airflow rate than at high values of those test results. This is generally acceptable because fans are not usually rated at the low pressure or low flow portions of their characteristic curves. If there is a need to reduce the uncertainty at either low flow or low pressure, then the instruments chosen to measure the corresponding quantity must be selected with suitable accuracy (lower uncertainties) for those conditions.

4.2.1.1 Calibration

Each pressure-indicating instrument shall be calibrated at both ends of the measurement scale, plus at least nine equally spaced intermediate points in accordance with the following. The reference instrument shall be have an accuracy of +/- 0.25% of reading or 0.5 Pa, whichever is greater, and a calibration traceable to NIST or other national physical measure recognized as equivalent by NIST.

4.2.1.2 Averaging

To obtain a representative reading, an instrument must either be damped or the reading must be averaged in a suitable manner. Averaging can be accomplished mentally if the fluctuations are small and regular. Multi-point or continuous-record averaging can be accomplished with instruments or analyzers designed for this purpose. The user is cautioned that this latter type of equipment may yield unreliable readings for a fan operating in an unstable region of its performance curve.

4.2.1.3 Correction

Manometer of the liquid column type readings should be corrected for any difference in change of length of the graduated scale of the manometer if the temperature of the ambient air differs from the temperature at which it was calibrated. The manufacturer of the manometer must supply the information for correction of the graduated scale due to temperature changes.

In case of using manometric head pressure, such as inches of water or mercury, the readings should be corrected for any difference in density of gauge liquid from standard and any difference in local gravitational acceleration from standard. The standard density of water or mercury and the standard gravitational acceleration are defined in Section 3.2.4

4.2.2 Pitot-static tube [4][5]

The total pressure or static pressure at a point may be sensed with a pitot-static tube of the proportions shown in Figure 1A and 1B. Either or both of these pressure signals can then be transmitted to a manometer or other indicator. If both pressure signals are transmitted to the same indicator, the differential is considered velocity pressure at the point of the impact opening.

4.2.2.1 Calibration

A pitot-static tube having the proportions shown in Figures 1A and 1B is considered a primary instrument and need not be calibrated, provided it is maintained in a condition conforming to this standard.

4.2.2.2 Size

The pitot-static tube shall be of sufficient size and strength to withstand the pressure forces exerted upon it. The outside diameter of the tube shall not exceed 1/30 of the test duct diameter except that, when the length of the supporting stem exceeds 24 tube diameters, the stem may be progressively increased beyond this distance. The minimum practical tube diameter is 2.5 mm (0.10 in.).

4.2.2.3 Support

Rigid support shall be provided to hold the pitot-static tube axis parallel to the axis of the duct within 3 degree and at the head locations specified in Figure 3 within 1 mm (0.05 in.) or 0.25% of the duct diameter, whichever is larger.

4.2.3 Static pressure tap

The static pressure at a point may be sensed with a pressure tap of the proportions shown in Figure 2A. The pressure signal can then be transmitted to an indicator.

4.2.3.1 Calibration

A static pressure tap meeting the requirements shown in Figure 2A is considered a primary instrument and need not be calibrated, provided it is maintained in a condition conforming to this standard. Precautions shall be taken to ensure that the air velocity does not influence the pressure measurement.

4.2.3.2 Averaging

A pressure tap is sensitive only to the pressure in the immediate vicinity of the opening. In order to obtain an average, at least four taps meeting the requirements of Figure 2A shall be manifolded into a piezometer ring. The manifold shall have an inside area at least four times that of each tap. An example is shown in Annex C.

4.2.3.3 Piezometer ring

A piezometer ring is specified for pressure measurement at upstream and downstream nozzle taps and for outlet duct or chamber measurement, unless a pitot traverse is specified. Measurement planes shall be located as shown in setup Figures 8A, 8B, 9A, 9B, 9C, 10A, 10B, 10C, 11, 12, 13, 14 or 15. See Annex C.

4.2.4 Total pressure tube

The total pressure in an inlet chamber may be sensed with a stationary tube of the proportions and requirements shown in Figure 2B. The tube shall face directly into the airflow.

4.2.4.1 Calibration

A total pressure tube is considered a primary instrument and need not be calibrated provided if it is maintained in a condition conforming to this standard.

4.2.4.2 Total pressure tubes used with setup Figures 13, 14 and 15

A total pressure tube is sensitive only to the pressure in the immediate vicinity of the open end. Locate the tube as shown in the setup figure. Since the air velocity in an inlet chamber is considered uniform due to the settling means employed, a single measurement is representative of the average chamber pressure.

4.2.5 Other pressure measurement systems

A pressure measurement system consisting of indicators and sensors other than manometers and pitot-static tubes, pressure taps or total pressure tubes may be used if the combined uncertainty of the system, including any transducers, does not exceed the combined uncertainty for an appropriate combination of manometers and pitot-static tubes, pressure taps or total pressure tubes. For a system used to determine fan pressure, the contribution to combined uncertainty in the pressure measurement shall not exceed that corresponding to 1% of the maximum observed static or total pressure reading during a test (indicator accuracy), plus 1% of the actual reading (averaging accuracy). For a system used to determine fan airflow rate, the combined uncertainty shall not exceed that corresponding to 1% of the maximum observed velocity pressure or differential pressure reading during a test (indicator accuracy), plus 1% of the actual reading (averaging accuracy). See the note in Section 4.2.1.

4.3 Airflow rate

Airflow rate shall be calculated as required by Section 7.3, either from measurements of pressure differential across a flow nozzle or from measurements of velocity pressure obtained by pitot traverse.

4.3.1 Pitot traverse

Airflow rate may be calculated from velocity pressure measurements obtained by traverses of a duct with a pitot-static tube for any point of operation from free delivery to shut-off, provided that average velocity corresponding to the airflow rate at free delivery at the test speed is at least 12 m/s (2400 fpm) [6]. See the note in Section 4.2.1.

4.3.1.1 Stations

The number and locations of the measuring stations on each diameter and the number of diameters shall be as specified in Figure 3.

4.3.1.2 Averaging

The stations shown in Figure 3 are located on each diameter according to the log-linear rule [7]. The arithmetic mean of the individual velocity pressure measurements made at these stations will be the mean air velocity through the measurement section for a wide variety of profiles [8].

4.3.2 Flow nozzle

Airflow rate may be calculated from the pressure differential measured across a flow nozzle or bank of flow nozzles for any point of operation from free delivery to shut-off, provided that the average velocity at the flow nozzle discharge corresponding to the airflow rate at free delivery at the test speed is at least 14 m/s (2800 fpm) [6].

4.3.2.1 Size

The flow nozzle or flow nozzles shall conform to Figure 4. A flow nozzle may be any convenient size except when a duct

is connected to the inlet of a flow nozzle, in which case the ratio of flow nozzle throat diameter to the diameter of the inlet duct shall not exceed 0.5.

4.3.2.2 Calibration

A flow nozzle meeting the requirements of this standard is considered a primary instrument and need not be calibrated if maintained in a condition conforming to this standard. Coefficients have been established for flow nozzle throat proportions $L = 0.5D$ and $L = 0.6D$, shown in Figure 4 [9]. Flow nozzle proportion $L = 0.6D$ is recommended for new construction.

4.3.2.3 Chamber flow nozzle

A flow nozzle without an integral throat tap may be used in a multiple nozzle chamber, in which case, upstream and downstream pressure taps shall be located as shown in the figure for the appropriate setup. An acceptable alternative is the use of a nozzle with a throat tap in which case the throat tap located as shown in Figure 4 shall be used in place of the downstream pressure tap shown in the figure for the setup and the piezometer for each flow nozzle shall be connected to its own indicator.

4.3.2.4 Ducted flow nozzle

A flow nozzle with an integral throat tap shall be used for a ducted flow nozzle setup. An upstream pressure tap shall be located as shown in the figure for the appropriate setup. The downstream tap is the integral throat tap and shall be located as shown in Figure 4.

4.3.2.5 Pressure tap

Each pressure tap shall conform to the requirements in Section 4.2.3.

4.3.3 Other airflow measurement methods

An airflow measurement method that utilizes a meter or traverse other than an airflow nozzle or pitot traverse shall be acceptable under this standard if the uncertainty introduced by the method does not exceed that introduced by an appropriate flow nozzle or pitot-static traverse method. The contribution to the combined uncertainty in the airflow measurement shall not exceed that corresponding to 1.2% of the discharge coefficient for a flow nozzle [10].

4.4 Fan input power

When reporting mechanical input power, power shall be determined from the rotational speed and beam load measured on a reaction dynamometer, from the rotational speed and torque measured on a torsion element, or the electrical input power measured on a calibrated motor.

When reporting electrical input power, power shall be determined from the measurement of active or real power by an electric meter.

4.4.1 Reaction dynamometers

A cradle or torque-table type reaction dynamometer having a demonstrated accuracy of ± 2% of observed reading may be used to determine fan input power.

4.4.1.1 Calibration

A reaction dynamometer shall be calibrated through its range of usage by suspending weights from a torque arm. The weights shall have certified accuracies of ± 0.2%. The length of the torque arm from rotational center to any given point of weight suspension shall be determined to an accuracy of ± 0.2%.

4.4.1.2 Tare

The zero torque equilibrium (tare) shall be checked before and after each test. The difference between the two tare values shall be within 0.5% of the maximum value measured during the test.

4.4.2 Torque

A torque meter having a demonstrated accuracy of ± 2% of observed reading may be used to determine fan input power.

4.4.2.1 Calibration

A torque measurement device shall have a static calibration and may have a running calibration through its range of use. The static calibration shall be accomplished by suspending weights from a torque arm. The weights shall have certified accuracies of ± 0.2%. The length of the torque arm from its rotational center to any given point of weight suspension shall be determined to an accuracy of ± 0.2%.

4.4.2.2 Tare

The zero torque equilibrium (tare) and the span of the readout system shall be checked before and after each test. In each case, the difference between the two readings shall be within 0.5% of the maximum respective value measured during the test.

4.4.3 Calibrated motor

Fan input power can be determined by measuring the electrical power input to the fan's motor only if the motor is calibrated. Calibrated motors shall have a demonstrated accuracy of ± 2%.

4.4.3.1 Motor calibration

A motor shall be calibrated throughout its range of use against an absorption dynamometer except as provided in Section 4.4.3.4. The absorption dynamometer shall be calibrated by suspending weights from a torque arm. The weights shall have accuracies of ± 0.2%. The length of the torque arm from rotational center to any given point of weight suspension shall be determined to an accuracy of ± 0.2%.

4.4.3.2 Calibrated motors controlled by a variable frequency drive (VFD)

Instead of calibrating the motor alone, as would be done if the motor was fed directly from the mains, the motor and variable frequency drive shall be calibrated as an assembly, using the same VFD and settings during the fan test as during the motor calibration, with input power measured upstream of the VFD. However, if the same VFD cannot be used during the fan test as during the motor calibration, the output of the VFD shall be filtered by a sinusoidal filter and the electric meter shall be placed between the sinusoidal filter and the motor.

4.4.3.3 Voltage and frequency

When using a calibrated motor, the motor input voltages(s) during the test shall be within 1% of the voltage(s) observed during calibration. The motor input frequency during the fan test shall be the same frequency supplied during the motor calibration.

4.4.3.4 IEEE Calibration

A polyphase induction motor may be calibrated by using the IEEE segregated loss method [11].

4.4.4 Electrical meter

An electrical meter shall have a certified accuracy of ± 1.0% of observed reading.

Electrical meters shall have a calibration traceable to NIST or other national physical measure recognized as equivalent by NIST.

4.4.5 Averaging

The torque measured on any instrument will fluctuate with time. In order to obtain a representative reading, either the instrument must be damped or the readings must be averaged in a suitable manner. Averaging can be accomplished mentally if the fluctuations are small and regular. Multi-point or continuous-record averaging can be accomplished with instruments or analyzers designed for this purpose. The user is cautioned that this latter type of equipment may yield unreliable readings for a fan operating in an unstable region of its performance curve, and care must be taken to ensure that the fan operates without pressure/airflow instability.

4.5 Rotational speed

The fan shaft speed shall be measured at regular intervals throughout the period of test for each point of operation, so as to ensure the determination of average rotational speed during each such period with an uncertainty not exceeding ± 0.5%. No device used shall significantly affect the rotational speed of the fan under test or its performance.

4.5.1 Calibration

Speed measurement devices shall have a calibration traceable to NIST or other national physical measure recognized as equivalent by NIST.

4.6 Air density

Air density shall be determined from measurements of wet-bulb temperature, dry-bulb temperature and barometric pressure. Other parameters may be measured and used if the maximum error in the calculated density does not exceed 0.5%.

4.6.1 Thermometer

Wet-bulb and dry-bulb temperatures shall be measured with thermometer or other instruments with a demonstrated accuracy of ± 1 °C (± 2 °F) and a readability of 0.5 °C (1 °F) or finer.

4.6.1.1 Calibration

A thermometer shall be calibrated over the range of temperatures to be encountered during test against a thermometer with a calibration traceable to NIST or other national physical measure recognized as equivalent by NIST.

4.6.1.2 Measurement conditions

A wet-bulb thermometer shall have an air velocity over the water-moistened wick-covered bulb of 3.5 to 10 m/s (700 to 2000 fpm) [12]. A dry-bulb thermometer shall be mounted upstream of the wet-bulb thermometer. Wet-bulb and dry-bulb thermometers shall be of the same type.

4.6.2 Barometer

Ambient barometric pressure shall be measured with an instrument having a demonstrated accuracy of ± 170 Pa (± 0.05 in. Hg) and readable to 34 Pa (0.01 in. Hg) or finer.

4.6.2.1 Calibration

Barometers shall have a calibration traceable to NIST or other national physical measure recognized as equivalent by NIST

4.6.2.2 Corrections

A mercury column barometer reading shall be corrected for any difference in mercury density from standard or for any change in the length of the graduated scale due to temperature. Refer to barometer manufacturer's instructions and ASHRAE 41.3, Annex B.

5. Test Setups and Equipment

5.1 Setup

Sixteen test setups are diagrammed in Figures 7A, 7B, 8A, 8B, 9A, 9B, 9C, 10A, 10B, 10C, 11, 12, 13, 14, 15 and 16.

5.1.1 Installation types

A fan shall be tested under this standard according to one of

the four general installation types that exist in actual applications [13]. These types are

A: Free inlet, free outlet
B: Free inlet, ducted outlet
C: Ducted inlet, free outlet
D: Ducted inlet, ducted outlet

5.1.2 Selection guide
Table 3 may be used as a guide to the selection of an appropriate setup.

Table 3
Selection Guide

	Installation Type			
Setup Figure	A	B	C	D
7A, 7B, 8A, 8B, 9A, 9B, 9C, 10A, 10B, 10C		NS		NS[1]
11,12,13,14, or 15	Y[2]	Y[3]	Y[1,4]	Y[1,3]
16			Y	Y[3]

NS = Not suitable for fans with significant swirl
Y = Suitable for all fan types

Notes:
1. A simulated inlet duct may be used
2. An auxiliary inlet bell or outlet duct may not be used
3. An outlet duct or a short outlet duct, per Section 5.2.3, may be used
4. No outlet duct may be used

5.1.3 Leakage
All joints in the chamber, ducts and other equipment between the fan and the flow measuring plane, including the nozzle wall, if applicable, shall be designed and maintained to minimize leakage.

Leakage through the chamber and the duct walls between the flow measurement plane and the fan under the test shall be minimize for the pressure range in the chamber during the test.

A leakage test shall be performed prior to initial use and periodically thereafter, with corrective action taken if necessary. See Annex B for two recommended leakage test methods.

5.2 Duct

A duct may be incorporated in a laboratory test setup to provide a measurement plane or to simulate the conditions the fan is expected to encounter in service or both. Dimension D_3 or D_4 in the test setup figures are the inside diameter of a circular cross section duct or equivalent diameter of a rectangular cross section duct with inside traverse dimensions *a* and *b*, where:

$$D = \sqrt{4ab/\pi} \qquad \text{Eq. 5.2}$$

5.2.1 Long Ducts

5.2.1.1 Airflow measurement duct
A duct with a measurement plane for airflow determination shall be straight and have a uniform circular cross section. A pitot traverse duct shall be at least 10 diameters long with the traverse plane located between 8.5 and 8.75 diameters from the upstream end. Such a duct may serve as an inlet duct or an outlet duct as well as to provide a measurement plane. A duct connected to the upstream side of a flow nozzle shall be between 6.5 and 6.75 diameters long when used only to provide a measurement plane or between 9.5 and 9.75 diameters long when used as an outlet duct as well.

5.2.1.2 Pressure measurement duct
A duct with a plane for pressure measurement shall be straight and may have either a uniform circular or rectangular cross section. An outlet duct with a piezometer ring shall be at least 10 diameters long with the piezometer plane located between 8.5 and 8.75 diameters from the upstream end.

5.2.1.3 Transition pieces
Transition pieces shall be used when a duct with a measuring plane is to be connected to the fan and it is of a size or shape that differs from the fan connection. Such pieces shall not contain any converging element that makes an angle with the duct axis greater than 7.5° or a diverging element that makes an angle with the duct axis of greater than 3.5°. The axes of the fan opening and duct shall coincide. See Figure 5. Connecting ducts and elbows of any size and shape may be used between a duct that provides a measurement plane and a chamber. This will lead to non-reproducible results unless actual duct configuration is identified.

5.2.1.4 Duct area
An outlet duct used to provide a measurement station shall not have an area more than 5% larger or smaller than the fan outlet area. An inlet duct used to provide a measurement station shall not be more than 12.5% larger, nor 7.5% smaller than the fan inlet area.

5.2.1.5 Roundness
The portion of a pitot traverse duct within 0.5*D* of either side of the plane of measurement shall be round within 0.5% of the duct diameter. The remainder of the duct shall be round within 1% of the duct diameter. The area of the plane of measurement shall be determined from the average of 4 diameters measured at 45° increments. The diameter measurements shall be accurate to within 0.2%.

5.2.1.6 Airflow straightener

An airflow straightener is specified so that flow lines will be approximately parallel to the duct axis. An airflow straightener shall be used in any duct that provides a measurement plane. The form of the airflow straightener shall be as specified in Figure 6A or 6B. To avoid excessive pressure drop through the airflow straightener, careful attention to construction tolerances and details is important [14].

5.2.2 Common segment

A standardized air path of a controlled geometry used to provide consistent test results between different test configurations. The geometry of the common segment is adapted from ISO 5801.

5.2.2.1 Common segment on the fan outlet

The geometry of the common segments used for testing on the outlet side of the fan is defined in Figures 18, 19 and 20. It incorporates a flow straightener per Figure 6B and a pressure measurement station one diameter from the exit end. Figures 19 and 20 also define the geometry of transition pieces from the fan outlet to the duct, and the limits of the duct area's deviation from the fan outlet area.

5.2.3 Simulated ducts

5.2.3.1 Short outlet duct

A short outlet duct that is used to simulate installation types B and D but in which no measurements are taken shall be between 2 and 3 equivalent diameters long, have an area within 1% of the fan outlet area and be of a uniform shape to fit the fan outlet [15].

5.2.3.2 Short inlet duct

An inlet bell or an inlet bell and one equivalent duct diameter of inlet duct may be mounted on the fan inlet to simulate an inlet duct. The bell and duct shall be of the same size and shape as the fan inlet boundary connection.

5.3 Chamber

A chamber may be incorporated in a laboratory test setup to provide a measurement station or to simulate the conditions the fan is expected to encounter in service or both. The chamber may have either a circular or rectangular cross-sectional shape. The dimension *M* in the test setup diagram is the inside diameter of a circular chamber or the equivalent diameter of dimensions *a* and *b*, where:

$$M = \sqrt{(4ab/\pi)} \qquad \text{Eq. 5.3}$$

5.3.1 Outlet chamber

An outlet chamber (Figure 11 or 12) shall have a cross-sectional area at least nine times the area of the fan outlet or outlet duct for a fan with axis of rotation perpendicular to the discharge airflow and a cross-sectional area at least sixteen times the area of the fan outlet or outlet duct for a fan with axis of rotation parallel to the discharge airflow [16].

5.3.2 Inlet chamber

An inlet chamber (Figure 13, 14 or 15) shall have a cross-sectional area at least five times the fan inlet area.

5.3.3 Airflow settling means

Airflow settling means shall be installed in chambers where indicated on the test setup figures. When the tested fan or a pressure measurement plane is located downstream of the settling means, the purpose of the settling means is to provide a substantially uniform flow ahead of the tested fan or pressure measurement plane. When the test fan or airflow measurement nozzles are located upstream of the settling means, the purpose of the settling means is to absorb the kinetic (velocity) energy of the upstream jet velocity and allow its expansion as if in an unconfined space.

Generally, several screens in each airflow-settling means will be required. Any combination of screens or perforated sheets may be used. However, three or four screens with decreasing percent of open area in the direction of airflow are suggested. It is also suggested that, within each settling means, screens of square mesh round wire be used upstream with perforated sheet used downstream. An open area of 50% to 60% is suggested for the initial screen.

All chambers must meet the requirements described in Annex A for the purposes of this standard.

5.3.4 Multiple nozzles

Multiple nozzles shall be located as symmetrically as possible. The centerline of each nozzle shall be at least 1.5 nozzle throat diameters from the chamber wall. The minimum distance between the centers of any two nozzles in simultaneous use shall be three times the throat diameter of the larger nozzle.

The uncertainty of the airflow rate measurement can be reduced by changing to a smaller nozzle or combination of nozzles for the lower airflow rate range of the fan.

Unused nozzles may be sealed on any test.

5.4 Variable air supply and exhaust systems

A means of varying the fan point of operation shall be provided in a laboratory test setup.

5.4.1 Throttling device

A throttling device may be used to control the fan point of operation. Such a device shall be located on the end of the test duct or test chamber and shall be symmetrical about the duct or chamber axis.

5.4.2 Auxiliary fan

Auxiliary fans may be used to control the point of test fan operation. They shall provide sufficient pressure at the desired airflow to overcome losses through the test setup. Airflow adjustment means, such as dampers, auxiliary fan blade or auxiliary fan inlet vane pitch control, or speed control may be required. An auxiliary fan shall not surge or pulsate during a test.

6. Observations and Conduct of Test

6.1 General test requirements

6.1.1 Determinations

The number of determinations must be adequate to define the shape of the performance curve. If the full curve (i.e., free delivery to blocked tight) is desired, the number of determinations shall be no less than eight. If only a portion of the curve is desired, the number of determinations shall be no less than three. If only a single point is required, it must fall within the range of these determinations.

6.1.2 Stable operating conditions

Statistically stable conditions shall be established before each determination. To test for stable condition, trial observations shall be made until steady readings are obtained. The range of airflow over which stable condition cannot be established shall be recorded and reported.

6.1.3 Stability

Any bi-stable performance points (airflow rates at which two different pressure values can be measured) shall be reported. When a result of hysteresis, the points shall be identified as that for decreasing airflow rate and that for increasing airflow rate.

6.2 Data to be recorded

6.2.1 Test fan

The description of the test fan, including specific dimensions, shall be recorded. The nameplate data shall be copied.

6.2.2 Test setup

The description of the test setup, including specific dimensions, shall be recorded. Reference may be made to the figures in this standard. Alternatively, a drawing or annotated photograph of the setup may be attached to the recorded data.

For setups using nozzles, the nozzle diameters shall be recorded.

Table 4
Test Data to be Recorded

		Setup Figure															
Item Description	**Parameter**	7A	7B	8A	8B	9A	9B	9C	10A	10B	10C	11	12	13	14	15	16
Barometric Pressure	p_b	x	x	x	x	x	x	x	x	x	x	x	x	x	x	x	x
Rotational Speed	N	x	x	x	x	x	x	x	x	x	x	x	x	x	x	x	x
Beam Load or Torque or Input Power	F or T or W	x	x	x	x	x	x	x	x	x	x	x	x	x	x	x	x
Velocity Pressure	P_{v3r}	x	x	x										x			x
Static Pressure	P_{s3r}	x	x	x										x			x
	P_{s4}			x	x	x	x	x	x	x	x				x		
	P_{s5}					x	x	x	x	x	x	x	x			x	
	P_{s7}											x	x				
Total Pressure	P_{t8}													x	x	x	
Temperature	t_{d0}	x	x	x	x	x	x	x	x	x	x	x	x	x	x	x	x
	t_{w0}	x	x	x	x	x	x	x	x	x	x	x	x	x	x	x	x
	t_{d2}	x	x	x	x	x	x	x	x	x	x	x	x	x	x	x	x
	t_{d3}	x	x											x			x
	t_{d4}			x	x	x	x	x	x	x	x				x		
	t_{d5}					x	x	x	x	x	x	x	x			x	
	t_{d8}													x	x	x	
Nozzle Pressure Drop	ΔP			x	x	x	x	x	x	x	x	x	x		x	x	

6.2.3 Instruments

The instruments and apparatus used in the test shall be listed and recorded, and the manufacturer names, model numbers, serial numbers and calibration information shall be provided if requested.

6.2.4 Test data

The test data which must be recorded varies by setup figure and is shown in Table 4. One reading for each checked parameter is required for each test point with the following exceptions:

1. When environmental conditions are varying, a minimum of three readings shall be taken for t_{d0}, t_{w0}, t_{d2}, and p_b.

2. One reading for each pitot station shall be recorded for P_{v3r} and P_{s3r}.

3. For a test where P_s is less than 1 kPa (4 in. wg), the temperatures t_{d3}, t_{d4}, t_{d5}, t_{d7}, and t_{d8} need not be measured. The value t_{d0} may be used.

4. For setups Figure 11 and 12, t_{d2} may be considered equal to t_{d5} and P_{s5} may be considered equal to P_{s7}.

5. A piezometer can be used to measure P_{s8} instead of P_{t8}. See Figures 13 or 14, Note 5, or Figure 15, Note 6, for requirements.

6. For setup Figure 15, P_{s5} may be calculated. See Figure 15, Note 5.

6.2.5 Personnel

The names of test personnel shall be listed with the data for which they are responsible.

7. Calculations

7.1 Calibration correction

Calibration correction, when required, shall be applied to individual readings before averaging or other calculations. Calibration correction need not be made if the correction is smaller than one-half the maximum allowable uncertainty, as specified in Section 4.

7.2 Density and viscosity of air

7.2.1 Atmospheric air density

The atmospheric air density (ρ_0) shall be determined from measurements taken in the general test area, and of ambient dry-bulb temperature (t_{d0}) ambient wet-bulb temperature (t_{w0}), and ambient barometric pressure (p_b) using the following formulae [17]:

$$p_e = 3.25 t_{w0}^2 + 18.6 t_{w0} + 692 \qquad \text{Eq. 7.1 SI}$$

$$p_e = (2.96 \times 10^{-4}) t_{w0}^2 - (1.59 \times 10^{-2}) t_{w0} + 0.41 \qquad \text{Eq. 7.1 I-P}$$

$$p_p = p_e - p_b \left(\frac{t_{d0} - t_{w0}}{1500} \right) \qquad \text{Eq. 7.2 SI}$$

$$p_p = p_e - p_b \left(\frac{t_{d0} - t_{w0}}{2700} \right) \qquad \text{Eq. 7.2 I-P}$$

$$\rho_0 = \frac{p_b - 0.378 p_p}{R(t_{d0} + 273.15)} \qquad \text{Eq. 7.3 SI}$$

$$\rho_0 = \frac{70.73(p_b - 0.378 p_p)}{R(t_{d0} + 459.67)} \qquad \text{Eq. 7.3 I-P}$$

Equation 7.1 is approximately correct for p_e for a range of t_{w0} between 4 °C and 32 °C (40 °F and 90 °F). The gas constant (R), for air, may be taken as 287.1J/kg•K (53.35 ft•lbf/lbm•°R).

7.2.2 Duct or chamber air density

The air density in a duct or chamber at Plane x, (ρ_x), may be calculated by correcting the density of atmospheric air (ρ_0) for the static pressure (P_{sx}) and dry-bulb temperature (t_{dx}) at Plane x using:

$$\rho_x = \rho_0 \left(\frac{t_{d0} + 273.15}{t_{dx} + 273.15} \right) \left(\frac{P_{sx} + p_b}{p_b} \right) \qquad \text{Eq. 7.4 SI}$$

$$\rho_x = \rho_0 \left(\frac{t_{d0} + 459.67}{t_{dx} + 459.67} \right) \left(\frac{P_{sx} + 13.595 p_b}{13.595 p_b} \right) \qquad \text{Eq. 7.4 I-P}$$

7.2.3 Fan air density

The fan air density (ρ) shall be calculated from the atmospheric air density (ρ_0), the total pressure at the fan inlet (P_{t1}), and the stagnation (total) temperature at the fan inlet (t_{s1}) using:

$$\rho = \rho_0 \left(\frac{P_{t1} + p_b}{p_b} \right) \left(\frac{t_{d0} + 273.15}{t_{s1} + 273.15} \right) \qquad \text{Eq. 7.5 SI}$$

$$\rho = \rho_0 \left(\frac{P_{t1} + 13.595 p_b}{13.595 p_b} \right) \left(\frac{t_{d0} + 459.67}{t_{s1} + 459.67} \right) \qquad \text{Eq. 7.5 I-P}$$

On all outlet duct and outlet chamber setups, P_{t1} is equal to zero and t_{s1} is equal to t_{d0}. On all inlet chamber setups, P_{t1} is equal to P_{t8} and t_{s1} is equal to t_{d8}. On the inlet duct setup,

t_{s1} is equal to t_{d3} and P_{t1} may be considered equal to P_{t3} for fan air density calculations.

7.2.4 Dynamic air viscosity

The viscosity (μ) shall be calculated from:

$$\mu = (17.23 + 0.048t_d) \times 10^{-6} \qquad \text{Eq. 7.6 SI}$$

$$\mu = (11.00 + 0.018t_d) \times 10^{-6} \qquad \text{Eq. 7.6 I-P}$$

The value for 20 °C (68 °F) air, which is 1.819×10^{-5} Pa•s (1.222×10^{-5} lbm/ft•s), may be used between 4 °C (40 °F) and 40 °C (100 °F) [9].

7.3 Fan airflow rate at test conditions

7.3.1 Nozzle

The fan airflow rate may be calculated from the pressure differential (ΔP) measured across a single nozzle or a bank of multiple nozzles [16].

7.3.1.1 Alpha ratio

The ratio of absolute nozzle exit pressure to absolute approach pressure shall be calculated from:

$$\alpha = \frac{P_{s6} + p_b}{P_{sx} + p_b} \qquad \text{Eq. 7.11 SI}$$

$$\alpha = \frac{P_{s6} + 13.595p_b}{P_{sx} + 13.595p_b} \qquad \text{Eq. 7.11 I-P}$$

Or:

$$\alpha = 1 - \left(\frac{\Delta P}{\rho_x R(t_{dx} + 273.15)}\right) \qquad \text{Eq. 7.12 SI}$$

$$\alpha = 1 - \left(\frac{5.2014\Delta P}{\rho_x \mathrm{R}(t_{dx} + 459.67)}\right) \qquad \text{Eq. 7.12 I-P}$$

The gas constant (R) may be taken as 287.1J/kg•K (53.35 ft•lb/lbm•°R) for air. Plane x is Plane 4 for duct approach or Plane 5 for chamber approach.

7.3.1.2 Beta ratio

The ratio (β) of nozzle exit diameter (D_6) to approach duct diameter (D_x) shall be calculated from:

$$\beta = \frac{D_6}{D_x} \qquad \text{Eq. 7.13}$$

For a duct approach, $D_x = D_4$. For a chamber approach, $D_x = D_5$, and β may be taken as zero.

7.3.1.3 Expansion factor

The expansion factor (Y) may be obtained from:

$$Y = \sqrt{\left(\frac{\gamma}{\gamma - 1}\right)\left(\alpha^{2/\gamma}\right)\left(\frac{1 - \alpha^{(\gamma-1)/\gamma}}{1 - \alpha}\right)\left(\frac{1 - \beta^4}{1 - \beta^4\alpha^{2/\gamma}}\right)} \qquad \text{Eq. 7.14}$$

The ratio of specific heats (γ) may be taken as 1.4 for air. Alternatively, the expansion factor for air may be approximated with sufficient accuracy by:

$$Y = 1 - (0.548 + 0.71\beta^4)(1 - \alpha) \qquad \text{Eq. 7.15}$$

7.3.1.4 Energy factor

The energy factor (E) may be determined by measuring velocity pressures (P_{vr}) upstream of the nozzle at standard traverse stations and calculating:

$$E = \frac{\left[\frac{\sum(P_{vr}^{1.5})}{n}\right]}{\left[\frac{\sum(P_{vr}^{0.5})}{n}\right]^3} \qquad \text{Eq. 7.16}$$

Sufficient accuracy can be obtained for setups qualifying under this standard by setting $E = 1.0$ for chamber approach or $E = 1.043$ for duct approach [8].

7.3.1.5 Reynolds number

The Reynolds number (Re) based on nozzle exit diameter (D_6) in meters (feet), shall be calculated from:

$$\mathrm{Re} = \frac{D_6 V_6 \rho_6}{\varkappa} \qquad \text{Eq. 7.17 SI}$$

$$\mathrm{Re} = \frac{D_6 V_6 \rho_6}{60\varkappa} \qquad \text{Eq. 7.17 I-P}$$

Using properties of air as determined in Section 7.2 and the appropriate velocity (V_6) in m/s (fpm). Since the velocity determination depends on Reynolds number, an approximation must be employed. It can be shown that:

$$\mathrm{Re} = \frac{\sqrt{2}}{\varkappa} C D_6 Y \sqrt{\frac{\Delta P \rho_x}{1 - E\beta^4}} \qquad \text{Eq. 7.18 SI}$$

$$\mathrm{Re} = \frac{1097}{60\varkappa} C D_6 Y \sqrt{\frac{\Delta P \rho_x}{1 - E\beta^4}} \qquad \text{Eq. 7.18 I-P}$$

For duct approach, $\rho_x = \rho_4$. For chamber approach, $\rho_x = \rho_5$, and β may be taken as zero.

Refer to Annex G for an example of an iterative process to determine Re and C.

7.3.1.6 Discharge coefficient

The nozzle discharge coefficient (C) shall be calculated from:

$$C = 0.9986 - \left(\frac{7.006}{\sqrt{\mathrm{Re}}}\right) + \left(\frac{134.6}{\mathrm{Re}}\right) \qquad \text{Eq. 7.19}$$

For : $L/D = 0.6$

$$C = 0.9986 - \left(\frac{6.688}{\sqrt{\mathrm{Re}}}\right) + \left(\frac{131.5}{\mathrm{Re}}\right) \qquad \text{Eq. 7.20}$$

For : $L/D = 0.5$

For Re of 12,000 and above [9].

Refer to Annex G for an example of an iterative process to determine Re and C.

7.3.1.7 Airflow rate for ducted nozzle

The airflow rate (Q_4) at the entrance to a ducted nozzle shall be calculated from:

$$Q_4 = \frac{\left(CA_6 Y \sqrt{\frac{2\Delta P}{\rho_4}}\right)}{\sqrt{1 - E\beta^4}} \qquad \text{Eq. 7.21 SI}$$

$$Q_4 = \frac{\left(1097.8 CA_6 Y \sqrt{\frac{\Delta P}{\rho_4}}\right)}{\sqrt{1 - E\beta^4}} \qquad \text{Eq. 7.21 I-P}$$

The area (A_6) is measured at the plane of the throat taps.

7.3.1.8 Airflow rate for chamber nozzles

The airflow rate (Q_5) at the entrance to a nozzle or multiple nozzles with chamber approach shall be calculated from:

$$Q_5 = Y \sqrt{\frac{2\Delta P}{\rho_5}} \sum (CA_6) \qquad \text{Eq. 7.22 SI}$$

$$Q_5 = 1097.8 Y \sqrt{\frac{\Delta P}{\rho_5}} \sum (CA_6) \qquad \text{Eq. 7.22 I-P}$$

The coefficient (C) and the area (A_6) must be determined for each nozzle, and their products must be summed as indicated. The area (A_6) is measured at the plane of the throat taps, or the nozzle exit for nozzles without throat taps.

7.3.1.9 Fan airflow rate

The fan airflow rate (Q) at test conditions shall be obtained from the equation of continuity:

$$Q = Q_x \left(\frac{\rho_x}{\rho}\right) \qquad \text{Eq. 7.23}$$

Where Plane x is either Plane 4 or Plane 5, as appropriate.

7.3.2 Velocity traverse

The fan airflow rate may be calculated from velocity pressure measurements (P_{v3}) taken by pitot traverse.

7.3.2.1 Velocity pressure

The velocity pressure (P_{v3}) corresponding to the average velocity shall be obtained by taking the square roots of the individual measurements (P_{v3r}), summing the roots, dividing by the number of measurements (n), and squaring the quotient as indicated by:

$$P_{v3} = \left(\frac{\sum \sqrt{P_{v3r}}}{n}\right)^2 \qquad \text{Eq. 7.7}$$

7.3.2.2 Velocity

The average velocity (V_3) shall be calculated from the air density at the plane of traverse (ρ_3) and the corresponding velocity pressure (P_{v3}) using:

$$V_3 = \sqrt{\frac{2P_{v3}}{\rho_3}} \qquad \text{Eq. 7.8 SI}$$

$$V_3 = 1097.8 \sqrt{\frac{P_{v3}}{\rho_3}} \qquad \text{Eq. 7.8 I-P}$$

7.3.2.3 Airflow rate

The airflow rate (Q_3) at the pitot traverse plane shall be calculated from the velocity (V_3) and the area (A_3) using:

$$Q_3 = V_3 A_3 \qquad \text{Eq. 7.9}$$

7.3.2.4 Fan airflow rate

The fan airflow rate at test conditions (Q) shall be obtained from the equation of continuity:

$$Q = Q_3 \left(\frac{\rho_3}{\rho}\right) \qquad \text{Eq. 7.10}$$

7.4 Fan velocity pressure at test conditions

7.4.1 Pitot traverse

When pitot traverse measurements are made, the fan velocity pressure (P_v) shall be determined from the velocity pressure (P_{v3}) using:

$$P_v = P_{v3}\left(\frac{\rho_3}{\rho_2}\right)\left(\frac{A_3}{A_2}\right)^2 \qquad \text{Eq. 7.24}$$

Whenever P_{s3} and P_{s2} differ by less than 1 kPa (4 in. wg), ρ_2 may be considered equal to ρ_3.

7.4.2 Nozzle

When airflow rate (Q) is determined from nozzle measurements, the fan velocity pressure (P_v) shall be calculated from the velocity (V_2) and air density (ρ_2) at the fan outlet using:

$$Q_2 = Q\left(\frac{\rho}{\rho_2}\right) \qquad \text{Eq. 7.25}$$

$$V_2 = \frac{Q_2}{A_2} \qquad \text{Eq. 7.26}$$

And:

$$P_v = \frac{\rho_2 V_2^2}{2} \qquad \text{Eq. 7.27 SI}$$

$$P_v = \rho_2\left(\frac{V_2}{1097.8}\right)^2 \qquad \text{Eq. 7.27 I-P}$$

Or:

$$P_v = \left(\frac{Q\rho}{A_2}\right)^2\left(\frac{1}{2\rho_2}\right) \qquad \text{Eq. 7.28 SI}$$

$$P_v = \left(\frac{Q\rho}{1097.8A_2}\right)^2\left(\frac{1}{\rho_2}\right) \qquad \text{Eq. 7.28 I-P}$$

For outlet duct setups, whenever P_{s4} and P_{s2} differ by less than 1 kPa (4 in. wg), ρ_2 may be considered equal to ρ_4.

7.5 Fan total pressure at test conditions

The fan total pressure shall be calculated from measurements of the pressures in ducts or chambers, corrected for pressure losses that occur in the measuring duct between the fan and the plane of measurement.

7.5.1 Averages

Certain averages shall be calculated from measurements, as follows:

7.5.1.1 Pitot traverse

When a pitot traverse is used for pressure measurement: the average velocity pressure (P_{v3}) shall be as determined in Section 7.3.1.1. The average velocity (V_3) shall be as determined in Section 7.3.1.2, and the average static pressure (P_{s3}) shall be calculated from:

$$P_{s3} = \frac{\Sigma P_{s3r}}{n} \qquad \text{Eq. 7.29}$$

7.5.1.2 Duct piezometer

When a duct piezometer is used for pressure measurement, the average static pressure (P_{s4}) shall be the measured value (P_{s4r}). The average velocity (V_4) shall be calculated from the airflow rate (Q) as determined in Section 7.3.1.9, and:

$$V_4 = \left(\frac{Q}{A_4}\right)\left(\frac{\rho}{\rho_4}\right) \qquad \text{Eq. 7.30}$$

And the average velocity pressure P_{v4} shall be calculated from:

$$P_{v4} = \frac{\rho_4 V_4^2}{2} \qquad \text{Eq. 7.31 SI}$$

$$P_{v4} = \rho_4\left(\frac{V_4}{1097.8}\right)^2 \qquad \text{Eq. 7.31 I-P}$$

7.5.1.3 Chamber

When a chamber piezometer or total pressure tube is used for pressure measurement, the average static pressure (P_{s7}) shall be the measured value (P_{s7r}) and the average total pressure (P_{t8}) shall be the measured value (P_{t8r}).

7.5.2 Pressure losses

Pressure losses shall be calculated for measuring ducts and straighteners that are located between the fan and the plane of measurement.

7.5.2.1 Hydraulic diameter

The hydraulic diameter for round ducts is the actual diameter (D). The hydraulic diameter for rectangular ducts shall be calculated from the duct inside dimensions a and b at the traverse using:

$$D_h = \frac{2ab}{a+b} \qquad \text{Eq. 7.32}$$

7.5.2.2 Reynolds Number

The Reynolds number (Re) based on the hydraulic diameter (D_h) in meters (feet) shall be calculated from:

$$\text{Re} = \frac{D_h V \rho}{\propto} \qquad \text{Eq. 7.33 SI}$$

$$\mathrm{Re} = \frac{D_h V \rho}{60 \propto} \qquad \text{Eq. 7.33 I-P}$$

Using properties of air as determined in Section 7.2 and the appropriate velocity (V) in m/s (fpm).

7.5.2.3 Coefficient of friction

The coefficient of friction (f) shall be determined from [19]:

$$f = \frac{0.14}{\mathrm{Re}^{0.17}} \qquad \text{Eq. 7.34}$$

7.5.2.4 Cell straightener equivalent length

The ratio of equivalent length (L_e) of a straightener to hydraulic diameter (D_h) shall be determined from the elemental thickness (y) and the equivalent diameter (D) using:

$$\frac{L_e}{D_h} = \frac{15.04}{\left[1 - 26.65\left(\frac{y}{D}\right) + 184.6\left(\frac{y}{D}\right)^2\right]^{1.83}} \qquad \text{Eq. 7.35}$$

This expression is exact for round duct straighteners and sufficiently accurate for rectangular duct straighteners.

7.5.2.5 Star straightener friction loss

The conventional loss coefficient of the star straightener, including the external duct, is given by:

$$\zeta_s = 0.95\mathrm{Re}^{-0.12} \qquad \text{Eq. 7.36}$$

7.5.2.6 Common part friction loss

$$\zeta_{cp} = 0.015 + 1.26(\mathrm{Re}_{Dh4}^{-0.3}) + 0.95(\mathrm{Re}_{Dh4}^{-0.12}) \qquad \text{Eq. 7.37}$$

7.5.3 Inlet total pressure

The total pressure at the fan inlet (P_{t1}) shall be calculated as follows:

7.5.3.1 Open inlet

When the fan draws directly from atmosphere, P_{t1} shall be considered equal to atmospheric pressure, which is zero gauge, so that:

$$P_{t1} = 0 \qquad \text{Eq. 7.38}$$

7.5.3.2 Inlet chamber

When the fan is connected to an inlet chamber, P_{t1} shall be considered equal to the chamber pressure (P_{t8}) so that:

$$P_{t1} = P_{t8} \qquad \text{Eq. 7.39}$$

7.5.3.3 Inlet duct

When the fan is connected to an inlet duct, P_{t1} shall be considered equal to the algebraic sum of the average static pressure (P_{s3}) and the average velocity pressure (P_{v3}), corrected for the friction due to the length of duct ($L_{1,3}$) between the measurement plane and the fan, so that:

$$P_{t1} = P_{s3} + P_{v3} - f\left(\frac{L_{1,3}}{D_{h3}}\right)P_{v3} \qquad \text{Eq. 7.40}$$

Pressure P_{s3} will be less than atmospheric and its value will be negative.

7.5.4 Outlet total pressure

The total pressure at the fan outlet (P_{t2}) shall be calculated as follows:

7.5.4.1 Open outlet

When the fan discharges directly to atmosphere, the static pressure at the fan outlet (P_{s2}) shall be considered equal to atmospheric pressure, which is zero, so that:

$$P_{t2} = P_{v2} = P_v \qquad \text{Eq. 7.41}$$

The value of P_v shall be as determined in Section 7.4.

7.5.4.2 Outlet chamber

When the fan discharges directly into an outlet chamber, the static pressure (P_{s2}) at the fan outlet shall be considered equal to the average chamber pressure (P_{s7}), so that:

$$P_{t2} = P_{s7} + P_{v2} = P_{s7} + P_v \qquad \text{Eq. 7.42}$$

The value of P_v shall be as determined in Section 7.4.

7.5.4.3 Short duct

When the fan discharges through an outlet duct without a measurement plane either to the atmosphere or into an outlet chamber, the pressure loss of the duct shall be considered zero and calculations shall be made according to either Section 7.5.4.1 or Section 7.5.4.2.

7.5.4.4 Piezometer outlet duct

When the fan discharges into a duct with a piezometer ring, total pressure (P_{t2}) shall be considered equal to the sum of the average static pressure (P_{s4}) and the velocity pressure (P_{v4}) corrected for the friction loss due to both the straightener and the length ($L_{2,4}$) of the duct between the fan outlet and the measurement plane.

When a cell straightener is used:

$$P_{t2} = P_{s4} + P_{v4} + f\left(\frac{L_{2,4}}{D_{h4}} + \frac{L_e}{D_{h4}}\right)P_{v4} \qquad \text{Eq. 7.43}$$

When a star straightener is used:

$$P_{t2} = P_{s4} + P_{v4} + f\left(\frac{L_{2,4}}{D_{h4}} - 2\right)P_{v4} + 0.95\left(\mathrm{Re}_4^{-0.12}\right)P_{v4}$$

Eq. 7.44

When a common part is used:

$$P_{t2} = P_{s4} + P_{v4} + (0.015 + 1.26(\mathrm{Re}^{-0.3}) + 0.95(\mathrm{Re}^{-0.12})P_{v4}$$

Eq. 7.45

7.5.4.5 Pitot outlet duct

When the fan discharges into a duct with a pitot traverse, total pressure (P_{t2}) shall be considered equal to the sum of the average static pressure (P_{s3}) and the velocity pressure (P_{v3}) corrected for the friction loss due to both the equivalent length (L_e) of the straightener and the length ($L_{2,3}$) of the duct between the fan outlet and the measurement plane.

When a cell straightener is used:

$$P_{t2} = P_{s3} + P_{v3} + f\left(\frac{L_{2,3}}{D_{h3}} + \frac{L_e}{D_{h3}}\right)P_{v3}$$

Eq. 7.46

When a star straightener is used:

$$P_{t2} = P_{s3} + P_{v3} + f\left(\frac{L_{2,3}}{D_{h3}} - 2\right)P_{v3} + 0.95(\mathrm{Re}_3)^{-0.12}P_{v3}$$

Eq. 7.47

7.5.5 Fan total pressure

The fan total pressure (P_t) at test conditions for incompressible flow shall be calculated from:

$$P_t = P_{t2} - P_{t1}$$

Eq. 7.48

This is an algebraic expression so that if P_{t1} is negative, P_t will be numerically greater than P_{t2}.

7.6 Fan static pressure at test conditions

The fan static pressure (P_s) at test conditions for incompressible flow shall be calculated from:

$$P_s = P_t - P_v$$

Eq. 7.49

7.7 Fan input power at test conditions

7.7.1 Reaction dynamometer

When a reaction dynamometer is used to measure torque, the fan input power (H_i) shall be calculated from the beam load (F), using the moment arm (l) and the fan rotational speed (N) using:

$$H_i = \frac{2\pi FlN}{60}$$

Eq. 7.50 SI

$$H_i = \frac{2\pi FlN}{33{,}000 \times 12}$$

Eq. 7.50 I-P

7.7.2 Torsion element

When a torsion element is used to measure torque, the fan input power (H_i) shall be calculated from the torque (T) and the fan rotational speed (N) using:

$$H_i = \frac{2\pi TN}{60}$$

Eq. 7.51 SI

$$H_i = \frac{2\pi TN}{33{,}000 \times 12}$$

Eq. 7.51 I-P

7.7.3 Calibrated motor

When a calibrated electric motor is used to measure input power, the fan input power (H_i) may be calculated from the power input (W_{em}) to the motor and the motor efficiency (η_m) using:

$$H_i = W_{em}\eta_m$$

Eq. 7.52 SI

$$H_i = \frac{W_m \eta_m}{745.7}$$

Eq. 7.52 I-P

7.8 Fan efficiency

7.8.1 Fan output power

The fan output power (H_o) would be proportional to the product of fan airflow rate (Q) and fan total pressure (P_t) if air were incompressible. Since air is compressible, thermodynamic effects influence output and a compressibility coefficient (K_p) must be applied to make power output proportional to (QP_t) [20].

$$H_o = QP_tK_p$$

Eq. 7.53 SI

$$H_o = \frac{QP_tK_p}{6343.3}$$

Eq. 7.53 I-P

7.8.2 Compressibility factor

The compressibility coefficient (K_p) may be determined from:

$$x = \frac{P_t}{P_{t1} + p_b}$$

Eq. 7.54 SI

$$x = \frac{P_t}{P_{t1} + 13.595p_b}$$

Eq. 7.54 I-P

And:

$$z = \left(\frac{\gamma - 1}{\gamma}\right)\left(\frac{\left[\frac{H_i}{Q}\right]}{P_{t1} + p_b}\right)$$

Eq. 7.55 SI

$$z = \left(\frac{\gamma - 1}{\gamma}\right)\left(\frac{\left[\frac{6343.3H_i}{Q}\right]}{P_{t1} + 13.595p_b}\right) \qquad \text{Eq. 7.55 I-P}$$

And:

$$K_p = \left(\frac{\ln(1+x)}{x}\right)\left(\frac{z}{\ln(1+z)}\right) \qquad \text{Eq. 7.56}$$

Which may be evaluated directly [20]. P_t, P_{t1}, p_b, H_i, and Q are all test values when mechanical input power is measured. When electrical input power is measured, H_i shall be estimated using Annex B.2 of ISO Standard 12759: 2010. The isentropic exponent (γ) may be taken as 1.4 for air.

7.8.3 Fan total efficiency

The fan total efficiency (η_t) is the ratio of the fan output power to fan input power, or:

$$\eta_t = \frac{QP_tK_p}{H_i} \qquad \text{Eq. 7.57 SI}$$

$$\eta_t = \frac{QP_tK_p}{6343.3H_i} \qquad \text{Eq. 7.57 I-P}$$

7.8.4 Fan static efficiency

The fan static efficiency (η_s) may be calculated from the fan total efficiency (η_t) and the ratio of the fan static pressure (P_s) to fan total pressure (P_t) using:

$$\eta_s = \eta_t\left(\frac{P_s}{P_t}\right) \qquad \text{Eq. 7.58}$$

7.8.5 Fan with drive total efficiency

$$\eta_{tx} = \frac{QP_tK_P}{W_x} \qquad \text{Eq. 7.59 SI}$$

$$\eta_{tx} = \frac{QP_tK_P}{W_x 8.507} \qquad \text{Eq. 7.59 I-P}$$

7.8.6 Fan with drive static efficiency

$$\eta_{sx} = \eta_{tx}\frac{P_s}{P_t} \qquad \text{Eq. 7.60}$$

K_p is assumed to be 1.

7.9 Conversion of results to other rotational speeds and air densities

Test results may be converted to a different air density or a different rotational speed from the conditions that were present during the test. During a laboratory test, the air density and rotational speed may vary slightly from one determination point to another. It may be desirable to convert all test points to a nominal density, a constant rotational speed or both. If the nominal air density (ρ_c) is within 10% of the fan air density (ρ) and the constant rotational speed (N_c) is within 5% of the actual rotational speed (N), then the air can be treated as if it were incompressible and Section 7.9.1 can be used. The compressible flow methods given in Section 7.9.2 can be used for any correction, but must be used when the air density or rotational speed exceeds the limits given above.

7.9.1 Conversion to other rotational speeds and air densities with incompressible flow

For small changes in air density or rotational speeds, compressibility can be assumed to be constant. Use K_{pc} = K_p and Equations 7.61–70 to make this conversion.

7.9.2 Conversion to other rotational speeds and air densities with compressible flow

For large changes in air density or rotational speed, it is necessary to treat the air as a compressible gas. This is an iterative process as follows (used for $Q > 0$):

Step 1: Using test values for Q, P_t and (H_i) with Equations 7.54, 7.55 and 7.56, find K_p.

Step 2: Use K_p = K_{pc} together with the desired rotational speed (N_c) and the desired density (ρ_c) in Equations 7.61, 7.62 and 7.65 to find Q_c, P_{tc} and H_{ic}.

Step 3: Use Equations 7.54, 7.55 and 7.56 and the new values Q_c, P_{tc}, and H_{ic} to find a new K_{pc}.

Step 4: Using the new value of K_{pc},together with N_c, ρ_c and Equations 7.61, 7.62 and 7.65, find the new Q_c, P_{tc} and H_{ic}.

Step 5: Repeat steps 3 and 4 until Q_c, P_{tc} and H_{ic} do not change (or are of sufficient accuracy).

These values converge rapidly, and usually only two or three iterations are required.

7.9.3 Conversion formulae for new densities and new rotational speeds

Actual test results may be converted to a new density (ρ_c) or to a new rotational speed (N_c) using the following formulae. See Annex E for their derivation.

When electrical input power is measured and results are to

be corrected to a different air density, use $K_{pc} = K_p$ in the following formulae. Density corrections shall be limited to 10% and speed corrections shall not be allowed.

$$Q_c = Q\left(\frac{N_c}{N}\right)\left(\frac{K_p}{K_{pc}}\right) \quad \text{Eq. 7.61}$$

$$P_{tc} = P_t\left(\frac{N_c}{N}\right)^2\left(\frac{\rho_c}{\rho}\right)\left(\frac{K_p}{K_{pc}}\right) \quad \text{Eq. 7.62}$$

$$P_{vc} = P_v\left(\frac{N_c}{N}\right)^2\left(\frac{\rho_c}{\rho}\right) \quad \text{Eq. 7.63}$$

$$P_{sc} = P_{tc} - P_{vc} \quad \text{Eq. 7.64}$$

$$H_{ic} = H_i\left(\frac{N_c}{N}\right)^3\left(\frac{\rho_c}{\rho}\right)\left(\frac{K_p}{K_{pc}}\right) \quad \text{Eq. 7.65}$$

$$W_{xc} = W_x\left(\frac{\rho_c}{\rho}\right)\left(\frac{K_p}{K_{pc}}\right) \quad \text{Eq. 7.68}$$

$$\eta_{tc} = \eta_t \quad \text{Eq. 7.69}$$

And:

$$\eta_{sc} = \eta_{tc}\left(\frac{P_{sc}}{P_{tc}}\right) \quad \text{Eq. 7.70}$$

8. Report and Results of Test

8.1 Report

The report of a laboratory fan test shall include the objective, results, test data and descriptions of the test fan, including appurtenances, test figure and installation type, test instruments and personnel, as outlined in Section 6. The test report shall also state the inlet, outlet and power boundaries of the fan and what appurtenances were included with them. The laboratory shall be identified by name and location.

8.2 Performance graphical representation of test results

The results of a fan test shall be presented as plots. The result of each determination shall be shown by a marker. The fan performance between the markers can be estimated by a curve or line. Typical fan performance curves are shown in Figure 17.

8.2.1 Coordinates and labeling

Performance plots shall be drawn with the fan airflow rate as abscissa. Fan pressure and fan power shall be plotted as ordinates. Fan total pressure, fan static pressure or both may be shown. If all results were obtained at the same rotational speed or if results were converted to a nominal rotational speed, that speed shall be listed. Otherwise, a plot with fan speed as ordinate shall be drawn. If all results were obtained at the same air density or if results were converted to a nominal air density, that air density shall be listed. Otherwise, a plot with air density as ordinate shall be drawn. Plots with fan total efficiency and/or fan static efficiency as ordinates may be drawn. Barometric pressure shall be listed when fan pressure exceed 2.5 kPa (10 in. wg).

8.2.2 Identification

Each sheet with the fan performance plots shall list the fan tested and the test figure (see Figures 7A, 7B, 8A, 8B, 9A, 9B, 9C, 10A, 10B, 10C, 11, 12, 13, 14, 15 and 16). The report that contains the information required in Section 8.1 shall be identified.

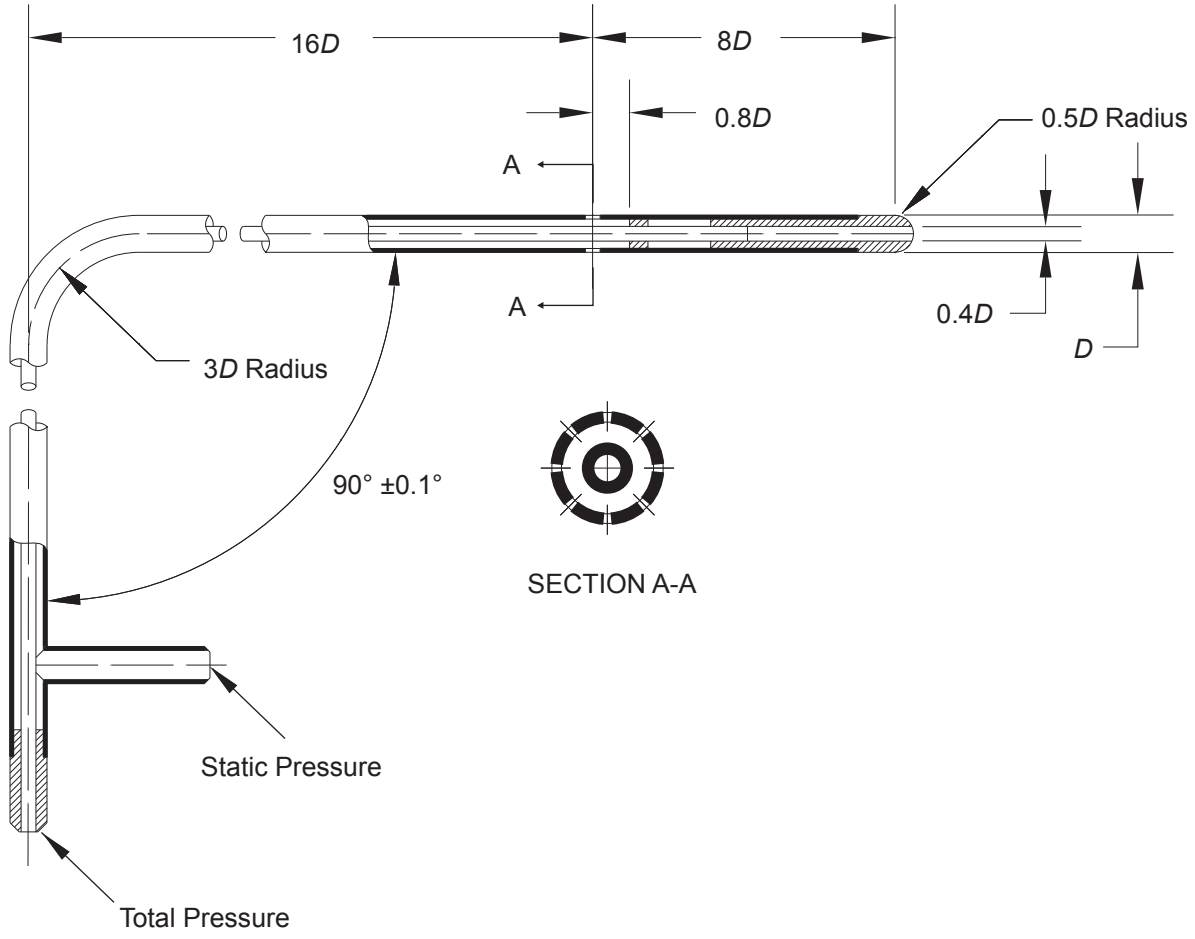

Notes:

1. Surface finish shall be 0.8 micrometer (32 micro-in.) or better. The static orifices may not exceed 1 mm (0.04 in.) diameter. The minimum pitot tube stem diameter recognized under this standard shall be 2.5 mm (0.10 in.) in no case shall the stem diameter exceed 1/30 of the test duct diameter.
2. Head shall be free from nicks and burrs.
3. All dimensions shall be within ±2%.
4. Section A-A shows 8 holes equally spaced and free from burrs. Hole diameter shall be 0.13*D*, but not exceeding 1 mm (0.04 in.) hole depth diameter.

Figure 1A
Pitot-Static Tube with Spherical Head

All other dimensions are the same
as for spherical head pitot- static tubes.

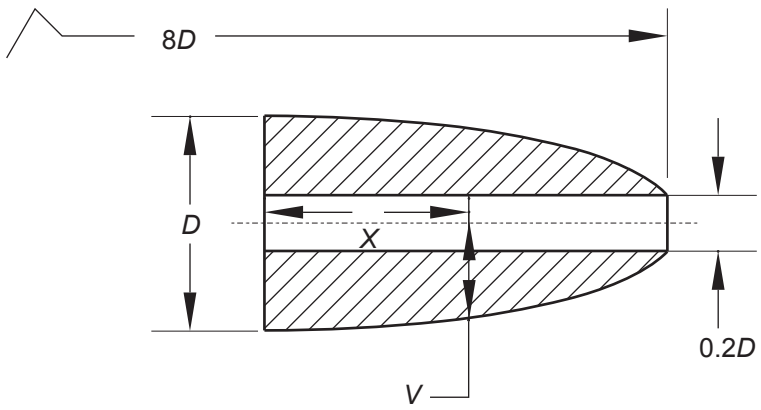

Alternate pitot-static tube with ellipsoidal head

X/D	V/D
0	0.5
0.237	0.496
0.336	0.494
0.474	0.487
0.622	0.477
0.741	0.468
0.936	0.449
1.025	0.436
1.134	0.42
1.228	0.404
1.313	0.388
1.39	0.371
1.442	0.357
1.506	0.343
1.538	0.333
1.57	0.323

X/D	V/D
1.602	0.314
1.657	0.295
1.698	0.279
1.73	0.266
1.762	0.25
1.796	0.231
1.83	0.211
1.858	0.192
1.875	0.176
1.888	0.163
1.9	0.147
1.91	0.131
1.918	0.118
1.92	0.109
1.921	0.1

Figure 1B
Alternate Pitot-Static Tube with Ellipsoidal Head

Surface shall be smooth and free
from irregularities within 20*D* of
hole. Edge of hole shall be square
and free from burrs.

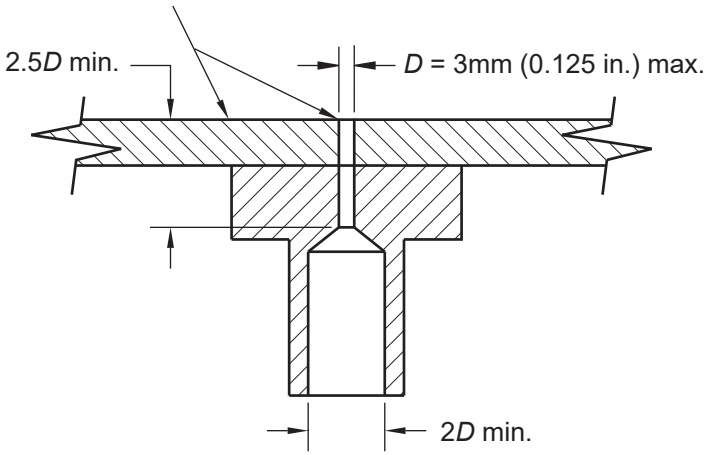

To pressure indicator

Figure 2A
Static Pressure Tap

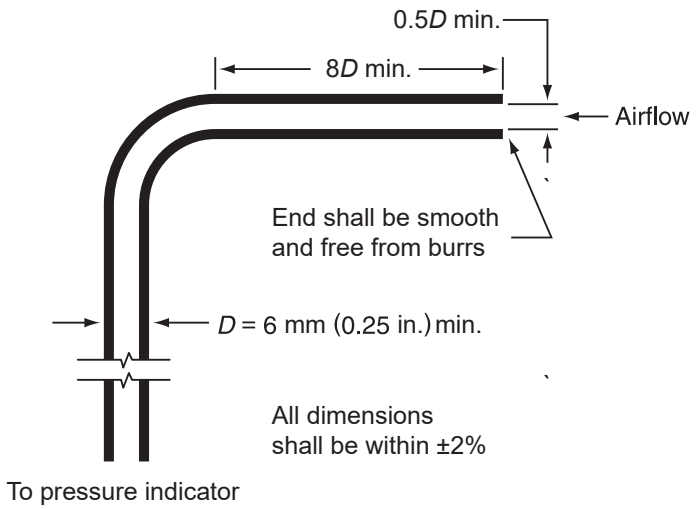

Figure 2B
Total Pressure Tube

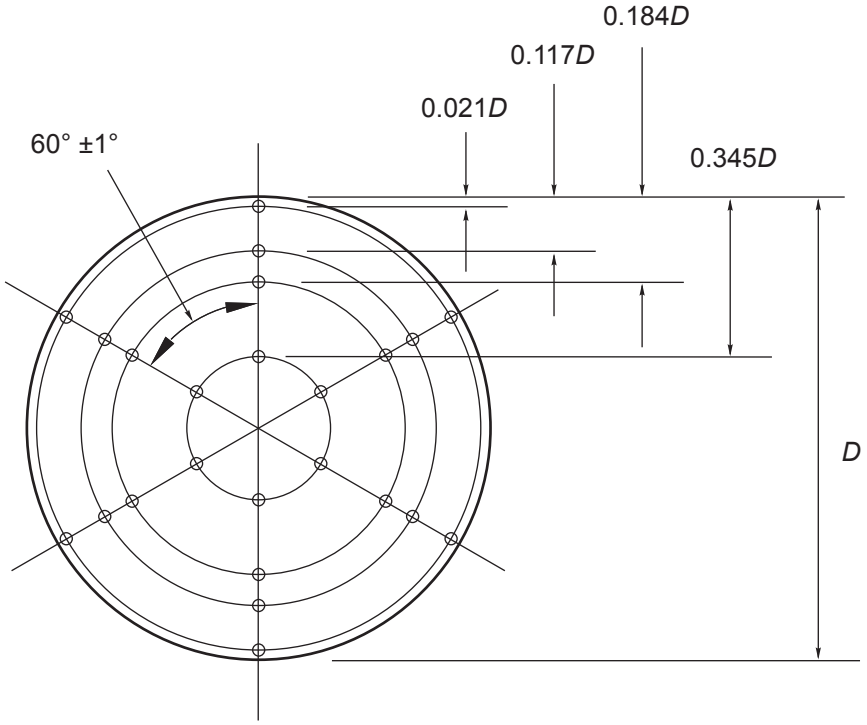

Notes:

1. *D* is the average of four measurements at traverse plane at 45° angles measured to accuracy of 0.2% *D*.
2. Traverse duct shall be round within 0.5% *D* at traverse plane and for a distance of 0.5*D* on either side of traverse plane.
3. All pitot positions ± 0.005*D* or 4 mm (0.125 in.), whichever is greater.

Figure 3
Traverse Points in a Round Duct

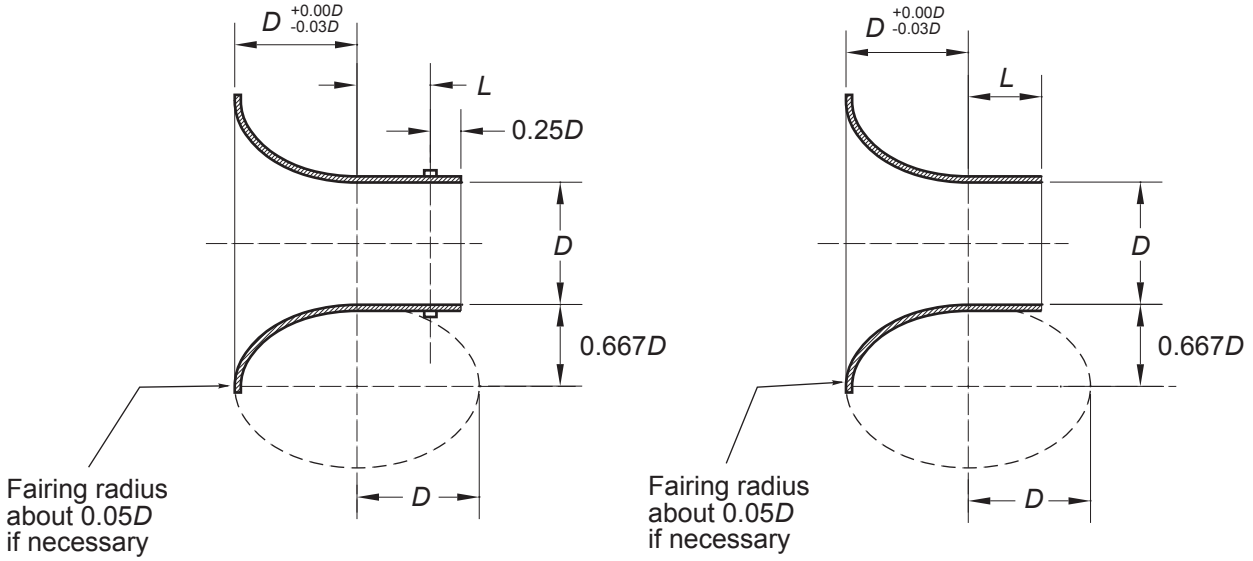

NOZZLE WITH THROAT TAPS

NOZZLE WITHOUT THROAT TAPS

Notes:

1. The nozzle shall have a cross section consisting of elliptical and cylindrical portions, as shown. The cylindrical portion is defined as the nozzle throat.
2. The cross section of the elliptical portion is one quarter of an ellipse, having the large axis *D* and the small axis 0.667*D*. A three-radii approximation to the elliptical form that does not differ at any point in the normal direction more than 1.5% from the elliptical form shall be used. The adjacent arcs, as well as the last arc, shall smoothly meet and blend with the nozzle throat. The recommended approximation which meets these requirements is shown in Figure 4B from John Cermak's memorandum report to AMCA 210/ASHRAE 51 Committee, June 16, 1992.
3. The nozzle throat dimension (*L*) shall be either 0.6*D* +/- 0.005*D* (recommended), or 0.5*D* +/- 0.005*D*.
4. The nozzle throat shall be measured (to an accuracy of 0.001*D*) at the minor axis of the ellipse and the nozzle exit. At each place, four diameters, approximately 45° apart, must be within +/-0.002*D* of the mean. At the entrance of the throat, the mean may be 0.002*D* greater than but no less than the mean of the nozzle exit.
5. The nozzle surface in the direction of flow from the nozzle inlet towards the nozzle exit shall fair smoothly so that a straight-edge may be rocked over the surface without clicking. The macro-pattern of the surface shall not exceed 0.001*D*, peak-to-peak. The edge of the nozzle exit shall be square, sharp and free of burrs, nicks or roundings.
6. In a chamber, the use of either of the nozzle types shown above is permitted. A nozzle with throat taps shall be used when the discharge is direct into a duct, and the nozzle outlet shall be flanged for connection with the duct.
7. A nozzle with throat taps shall have four such taps conforming to Figure 2A, located 90° ± 2° apart. All four taps shall be connected to a piezometer ring.

Figure 4A
Nozzles

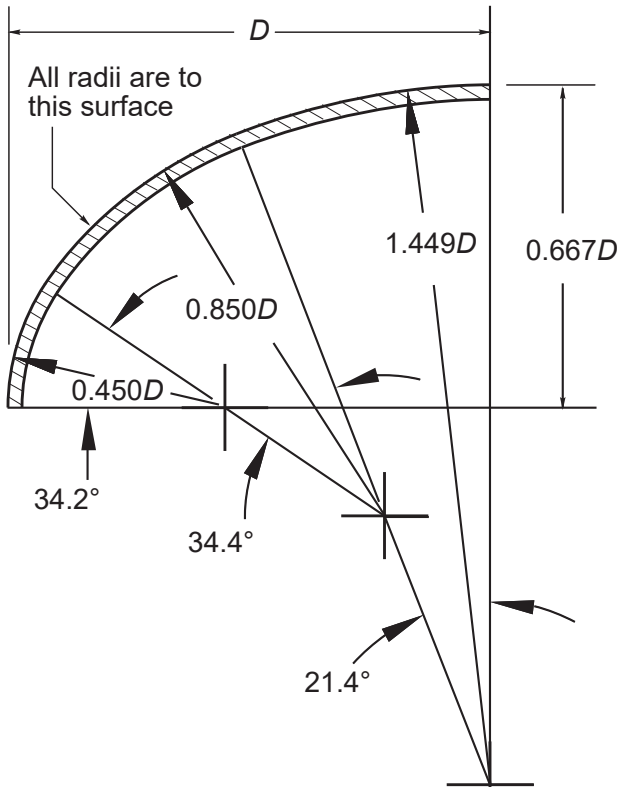

Figure 4B
Three Arc Approximation of Elliptical Nozzle

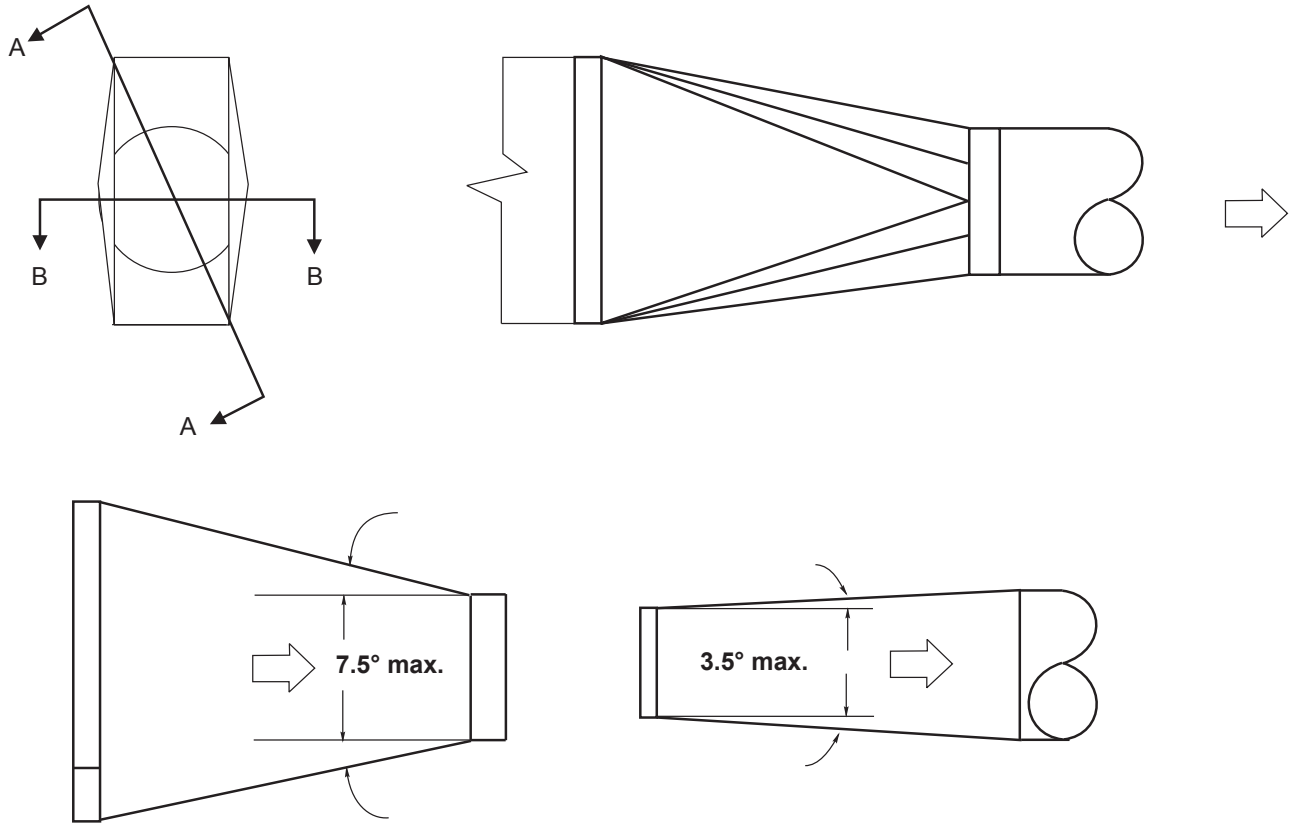

SECTION A-A
(CONVERGING SECTION)

SECTION B-B
(DIVERGING SECTION)

Figure 5
Transition Piece for Long Ducts

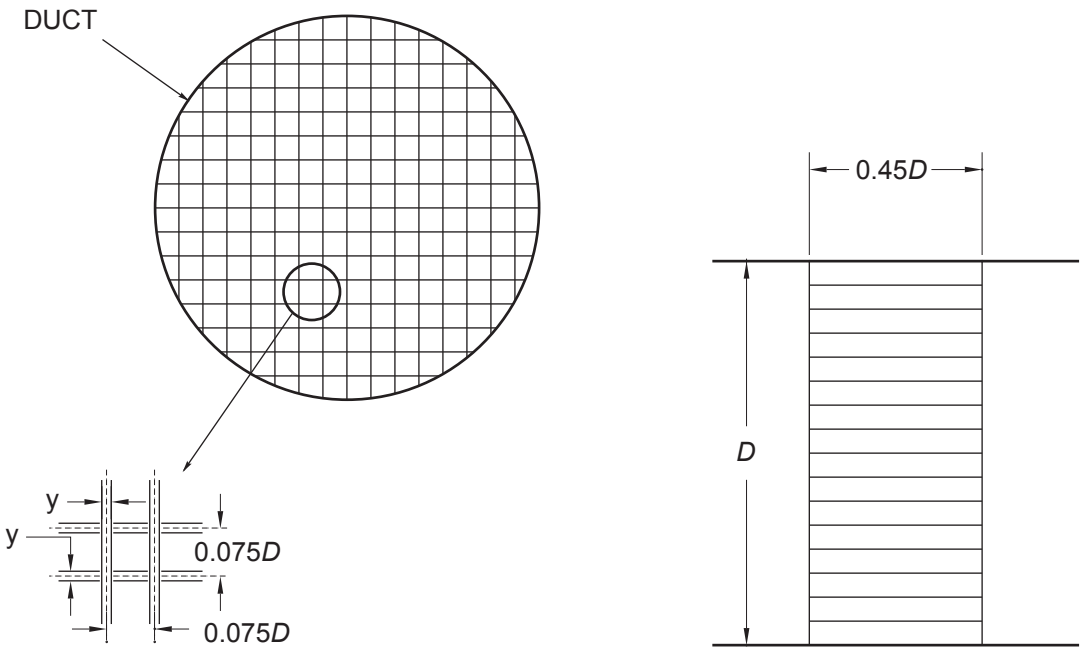

Notes:

1. All dimensions shall be within ±0.005*D* except *y*, which shall not exceed 0.005*D*
2. Cell sides shall be flat and straight. Where *y* > 3 mm (0.125 in.), the leading edge of each segment shall have a chamfer of 1.3 mm (0.05 in.) per side. The method of joining cell segments (such as tack welds) shall be kept to the minimum required for mechanical integrity and shall result in minimum protrusion into the fluid stream.

Figure 6A
Flow Straightener — Cell Type

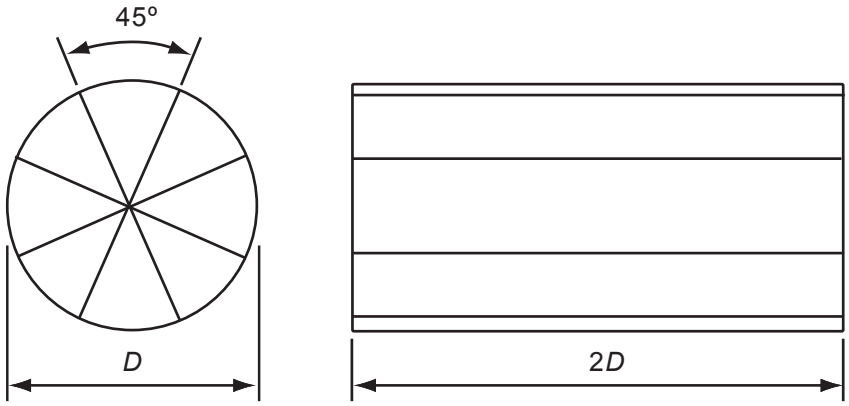

The star straightener will be constructed of eight radial blades of length equal to $2D_4$ (with a ±1% tolerance) and of thickness not greater than $0.007D_4$. The blades will be arranged to be equidistant on the circumference with the angular deviation being no greater than 5º between adjacent plates.

Figure 6B
Flow Straightener — Star Type

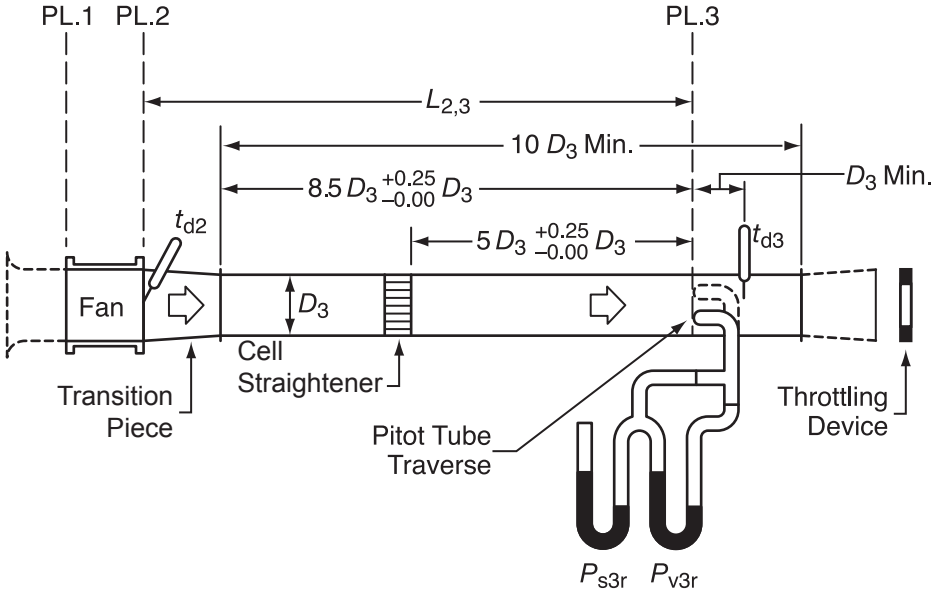

Notes:

1. Dotted lines on fan inlet indicate an inlet bell and one equivalent duct diameter, which may be used for inlet duct simulation. The duct friction shall not be considered.
2. Dotted lines on the outlet indicate a diffuser cone that may be used to approach more nearly free delivery.

Flow and Pressure Formulae

$Q = Q_3\left(\frac{\rho_3}{\rho}\right)$	$P_t = P_{t2} - P_{t1}$	$P_v = P_{v3}\left(\frac{A_3}{A_2}\right)^2\left(\frac{\rho_3}{\rho_2}\right)$	$P_s = P_t - P_v$
$Q_3 = V_3 A_3$	$P_{t1} = 0$	$P_{v3} = \left(\frac{\sum\sqrt{P_{v3r}}}{n}\right)^2$	$P_{s3} = \frac{\sum P_{s3r}}{n}$
$^*V_3 = \sqrt{2}\sqrt{\frac{P_{v3}}{\rho_3}}$	$P_{t2} = P_{s3} + P_{v3} + f\left(\frac{L_{2,3}}{D_{h3}} + \frac{L_e}{D_{h3}}\right)P_{v3}$		

*The formulae given above are the same in both SI and the I-P systems except for V_3; in the I-P version, the constant $\sqrt{2}$ is replaced with the value 1097.8.

Figure 7A
Outlet Duct Setup — Pitot Traverse in Outlet Duct with Cell Straightener

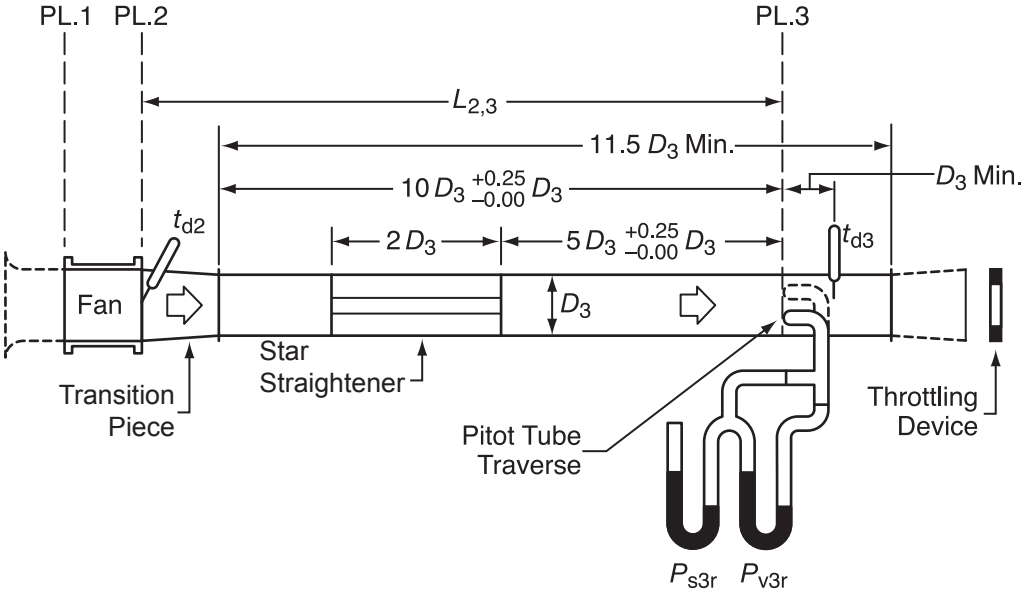

Notes:

1. Dotted lines on fan inlet indicate an inlet bell and one equivalent duct diameter, which may be used for inlet duct simulation. The duct friction shall not be considered.
2. Dotted lines on the outlet indicate a diffuser cone that may be used to approach more nearly free delivery.

Flow and Pressure Formulae

$Q = Q_3\left(\frac{\rho_3}{\rho}\right)$	$P_t = P_{t2} - P_{t1}$	$P_v = P_{v3}\left(\frac{A_3}{A_2}\right)^2\left(\frac{\rho_3}{\rho_2}\right)$	$P_s = P_t - P_v$
$Q_3 = V_3 A_3$	$P_{t1} = 0$	$P_{v3} = \left(\frac{\sum\sqrt{P_{v3r}}}{n}\right)^2$	$P_{s3} = \frac{\sum P_{s3r}}{n}$
$^*V_3 = \sqrt{2}\sqrt{\frac{P_{v3}}{\rho_3}}$	$P_{t2} = P_{s3} + P_{v3} + f\left(\frac{L_{2,3}}{D_{h3}} - 2\right)P_{v3} + 0.95(\mathrm{Re}_3)^{-0.12}P_{v3}$		

*These formulae are the same in both the SI and I-P systems except for V_3; in the I-P version, the constant $\sqrt{2}$ is replaced with the value 1097.8.

Figure 7B
Outlet Duct Setup — Pitot Traverse in Outlet Duct with Star Straightener

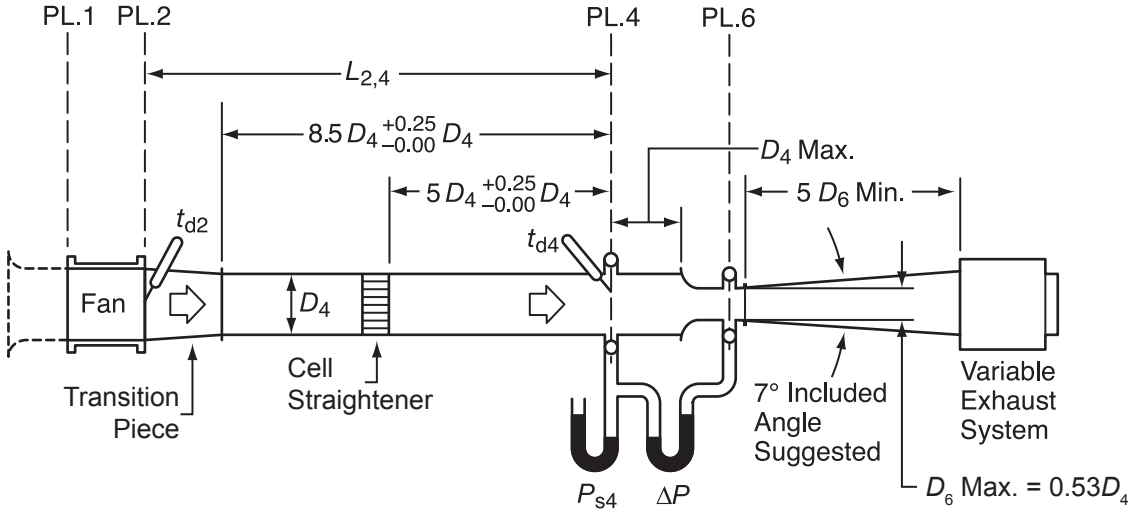

Notes:

1. Dotted lines on fan inlet indicate an inlet bell and one equivalent duct diameter, which may be used for inlet duct simulation. The duct friction shall not be considered.
2. This figure may terminate at Plane 6 and interchangeable nozzles may be employed. In this case $\Delta P = P_{s4}$.
3. Variable exhaust system may be an auxiliary fan or a throttling device.
4. Nozzle shall be in accordance with Figure 4A nozzle with throat taps.

Flow and Pressure Formulae

$Q = Q_4\left(\frac{\rho_4}{\rho}\right)$	$P_t = P_{t2} - P_{t1}$	$P_v = P_{v4}\left(\frac{A_4}{A_2}\right)^2\left(\frac{\rho_4}{\rho_2}\right)$	$P_s = P_t - P_v$
$^*Q_4 = \frac{\sqrt{2}CA_6Y\sqrt{\frac{\Delta P}{\rho_4}}}{\sqrt{1-E\beta^4}}$	$P_{t1} = 0$	$^*P_{v4} = \left(\frac{V_4}{\sqrt{2}}\right)^2\rho_4$	
$V_4 = \frac{Q_4}{A_4}$	$P_{t2} = P_{s4} + P_{v4} + f\left(\frac{L_{2,4}}{D_{h4}} + \frac{L_e}{D_{h4}}\right)P_{v4}$		

*These formulae are the same in both the SI and the I-P systems except for Q_4 and P_{v4}; in the I-P version, the constant $\sqrt{2}$ is replaced with the value 1097.8.

Figure 8A
Outlet Duct Setup — Nozzle on End of Outlet Duct with Cell Straightener

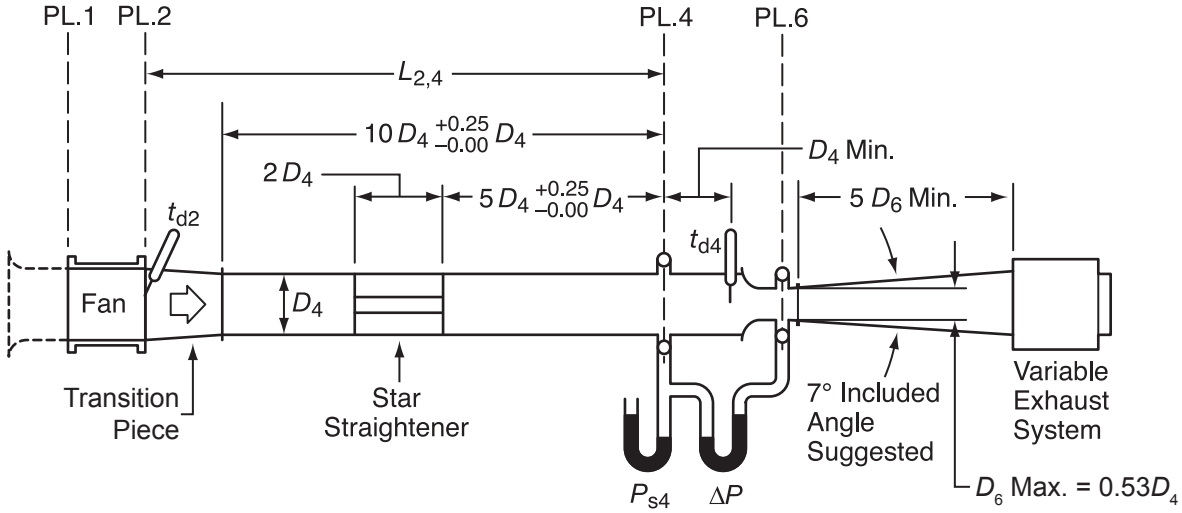

Notes:

1. Dotted lines on fan inlet indicate an inlet bell and one equivalent duct diameter, which may be used for inlet duct simulation. The duct friction shall not be considered.
2. This figure may terminate at Plane 6 and interchangeable nozzles may be employed. In this case, $\Delta P = P_{s4}$.
3. Variable exhaust system may be an auxiliary fan or a throttling device.
4. Nozzle shall be in accordance with Figure 4A nozzle with throat taps.

Flow and Pressure Formulae

$Q = Q_4\left(\frac{\rho_4}{\rho}\right)$	$P_t = P_{t2} - P_{t1}$	$P_v = P_{v4}\left(\frac{A_4}{A_2}\right)^2\left(\frac{\rho_4}{\rho_2}\right)$	$P_s = P_t - P_v$
$^*Q_4 = \frac{\sqrt{2}CA_6Y\sqrt{\frac{\Delta P}{\rho_4}}}{\sqrt{1-E\beta^4}}$	$P_{t1} = 0$	$^*P_{v4} = \left(\frac{V_4}{\sqrt{2}}\right)^2\rho_4$	
$V_4 = \frac{Q_4}{A_4}$	$P_{t2} = P_{s4} + P_{v4} + f\left(\frac{L_{2,4}}{D_{h4}} - 2\right)P_{v4} + 0.95(\mathrm{Re}_4)^{-0.12}P_{v4}$		

*These formulae are the same in both the SI and the I-P systems except for Q_4 and P_{v4}; in the I-P version, the constant $\sqrt{2}$ is replaced with the value 1097.8.

Figure 8B
Outlet Duct Setup — Nozzle on End of Outlet Duct with Star Straightener

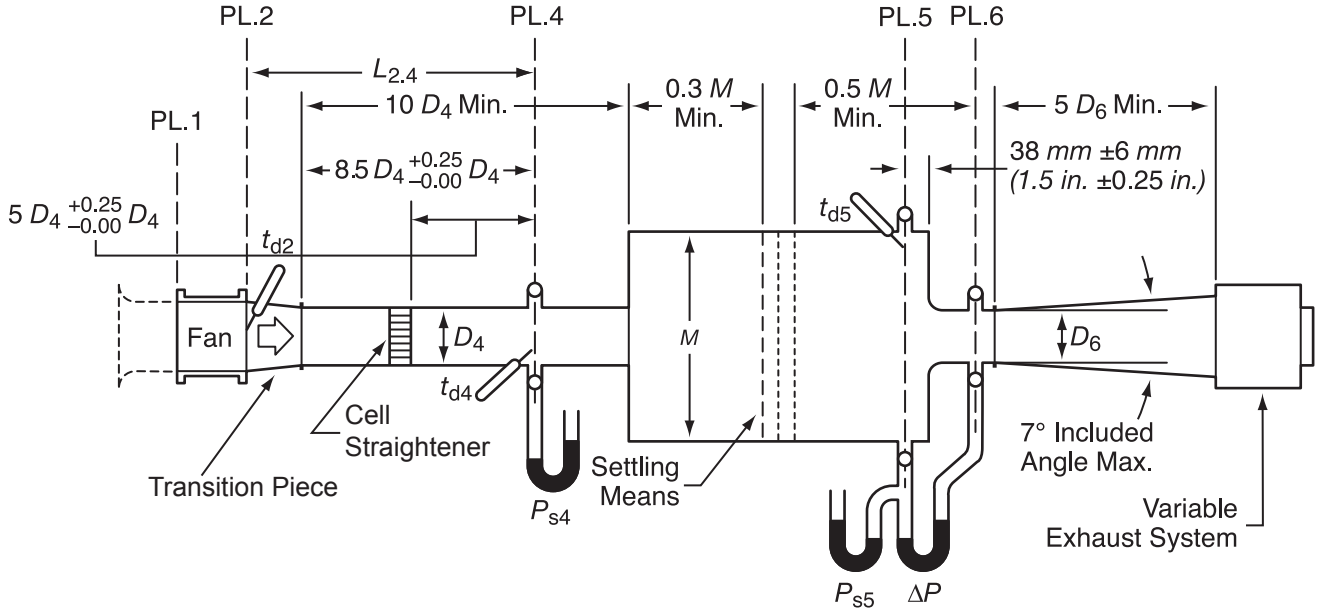

Notes:

1. Dotted lines on fan inlet indicate an inlet bell and one equivalent duct diameter, which may be used for inlet duct simulation. The duct friction shall not be considered.
2. Additional ductwork of any size including elbows may be used to connect between the chamber and the exit of the 10*D* minimum test duct.
3. Variable exhaust system may be an auxiliary fan or a throttling device.
4. Minimum (*M*) is determined by the requirements of Section 5.3.1 for this figure.
5. Nozzle shall be in accordance with Figure 4A nozzle with throat taps.

Flow and Pressure Formulae

$Q = Q_5\left(\frac{\rho_5}{\rho}\right)$	$P_t = P_{t2} - P_{t1}$	$P_v = P_{v4}\left(\frac{A_4}{A_2}\right)^2\left(\frac{\rho_4}{\rho_2}\right)$	$P_s = P_t - P_v$
$^*Q_5 = \sqrt{2}CA_6Y\sqrt{\frac{\Delta P}{\rho_5}}$	$P_{t1} = 0$	$^*P_{v4} = \left(\frac{V_4}{\sqrt{2}}\right)^2 \rho_4$	
$V_4 = \left(\frac{Q}{A_4}\right)\left(\frac{\rho}{\rho_4}\right)$	$P_{t2} = P_{s4} + P_{v4} + f\left(\frac{L_{2,4}}{D_{h4}} + \frac{L_e}{D_{h4}}\right)P_{v4}$		

*These formulae are the same in both the SI and the I-P systems except for Q_5 and P_{v4}; in the I-P version, the constant $\sqrt{2}$ is replaced with the value 1097.8.

Figure 9A
Outlet Duct Setup — Nozzle On End of Chamber with Cell Straightener

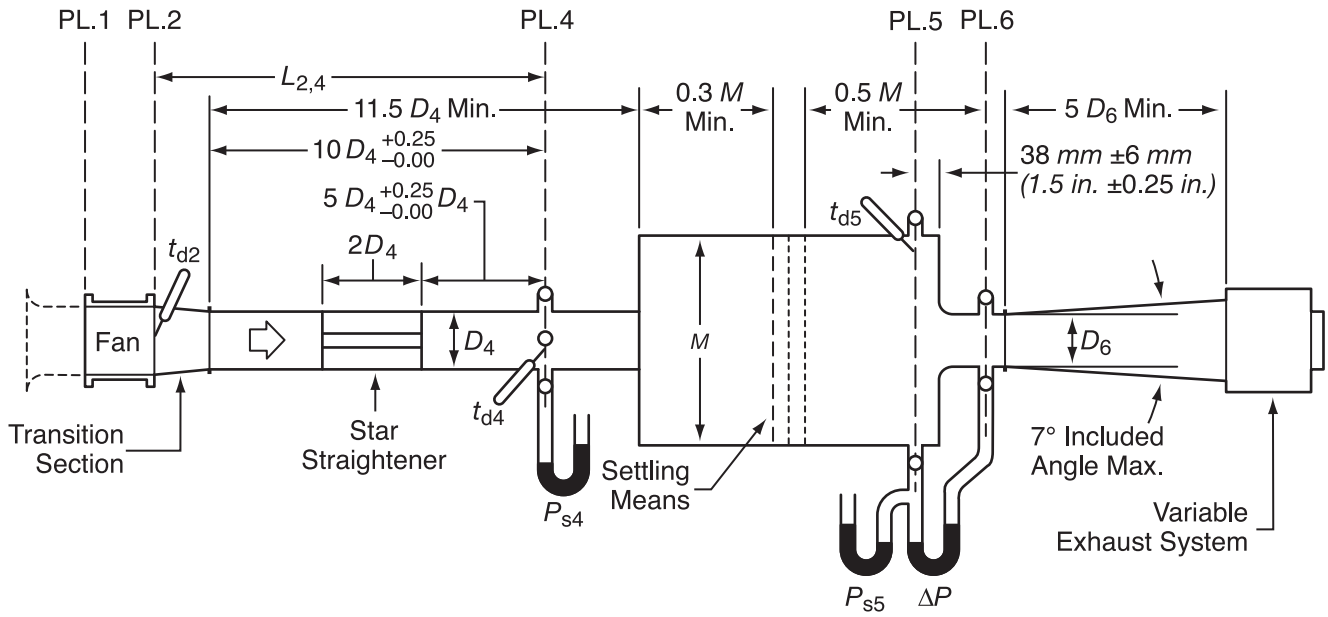

Notes:

1. Dotted lines on fan inlet indicate an inlet bell and one equivalent duct diameter which may be used for inlet duct simulation. The duct friction shall not be considered.
2. Additional ductwork of any size including elbows may be used to connect between the chamber and the exit of the 11.5*D* minimum test duct.
3. Variable exhaust system may be an auxiliary fan or a throttling device.
4. Minimum (*M*) is determined by the requirements of Section 5.3.1 for this figure.
5. Nozzle shall be in accordance with Figure 4A nozzle with throat taps.

Flow and Pressure Formulae

$Q = Q_5\left(\frac{\rho_5}{\rho}\right)$	$P_t = P_{t2} - P_{t1}$	$P_v = P_{v4}\left(\frac{A_4}{A_2}\right)^2\left(\frac{\rho_4}{\rho_2}\right)$	$P_s = P_t - P_v$
$^*Q_5 = \sqrt{2}CA_6Y\sqrt{\frac{\Delta P}{\rho_5}}$	$P_{t1} = 0$	$^*P_{v4} = \left(\frac{V_4}{\sqrt{2}}\right)^2 \rho_4$	
$V_4 = \left(\frac{Q}{A_4}\right)\left(\frac{\rho}{\rho_4}\right)$	$P_{t2} = P_{s4} + P_{v4} + f\left(\frac{L_{2,4}}{D_{h4}} - 2\right)P_{v4} + 0.95(\mathrm{Re})^{-0.12}P_{v4}$		

*These formulae are the same in both the SI and the I-P systems except for Q_5 and P_{v4}; in the I-P version, the constant $\sqrt{2}$ is replaced with the value 1097.8.

Figure 9B
Outlet Duct Setup — Nozzle On End of Chamber with Star Straightener

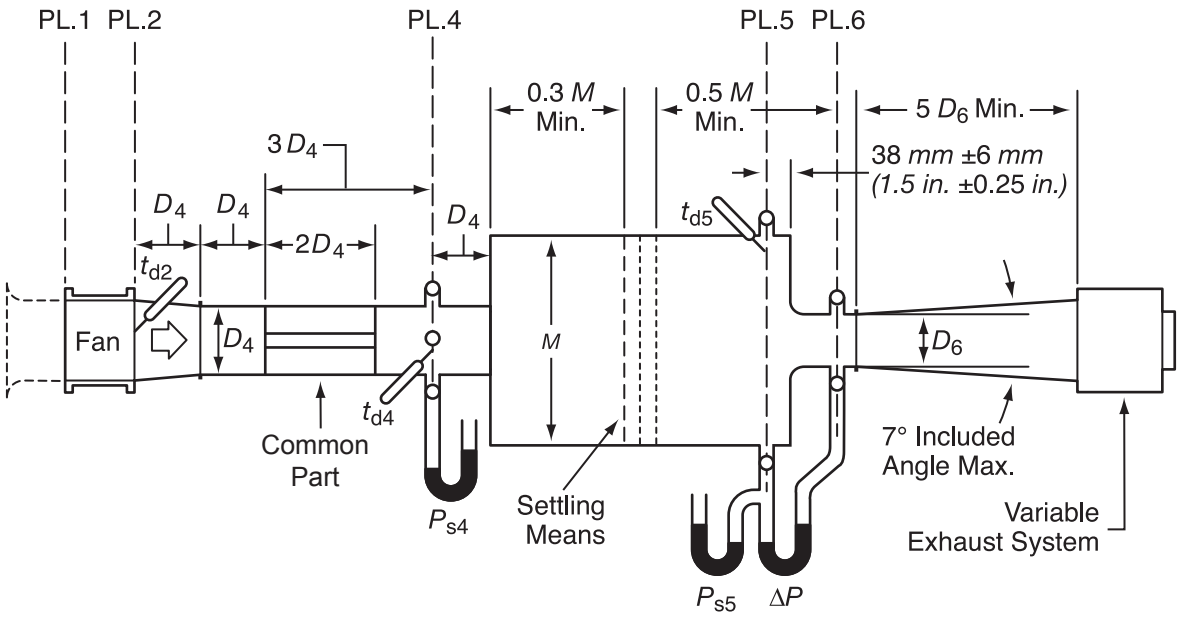

Notes:

1. Dotted lines on fan inlet indicate an inlet bell and one equivalent duct diameter, which may be used for inlet duct simulation. The duct friction shall not be considered.
2. Additional ductwork of any size including elbows may be used to connect between the chamber and the exit of the test duct shown between the test fan and the chamber.
3. Variable exhaust system may be an auxiliary fan or a throttling device.
4. Minimum (*M*) is determined by the requirements of Section 5.3.1 for this figure.
5. Nozzle shall be in accordance with Figure 4A — Nozzle with Throat Taps

Flow and Pressure Formulae

$Q = Q_5\left(\frac{\rho_5}{\rho}\right)$	$P_t = P_{t2} - P_{t1}$	$P_v = P_{v4}\left(\frac{A_4}{A_2}\right)^2\left(\frac{\rho_4}{\rho_2}\right)$	$P_s = P_t - P_v$
$^*Q_5 = \sqrt{2}CA_6Y\sqrt{\frac{\Delta P}{\rho_5}}$	$P_{t1} = 0$	$^*P_{v4} = \left(\frac{V_4}{\sqrt{2}}\right)^2 \rho_4$	
$V_4 = \left(\frac{Q}{A_4}\right)\left(\frac{\rho}{\rho_4}\right)$	$P_{t2} = P_{s4} + P_{v4} + (0.015 + 1.26(Re)^{-0.3} + 0.95(Re)^{-0.12})P_{v4}$		

*These formulae are the same in both the SI and the I-P systems except for Q5 and Pv4; in the I-P version, the constant $\sqrt{2}$ is replaced with the value 1097.8.

Figure 9C
Outlet Duct Setup — Nozzle On End of Chamber with Common Part

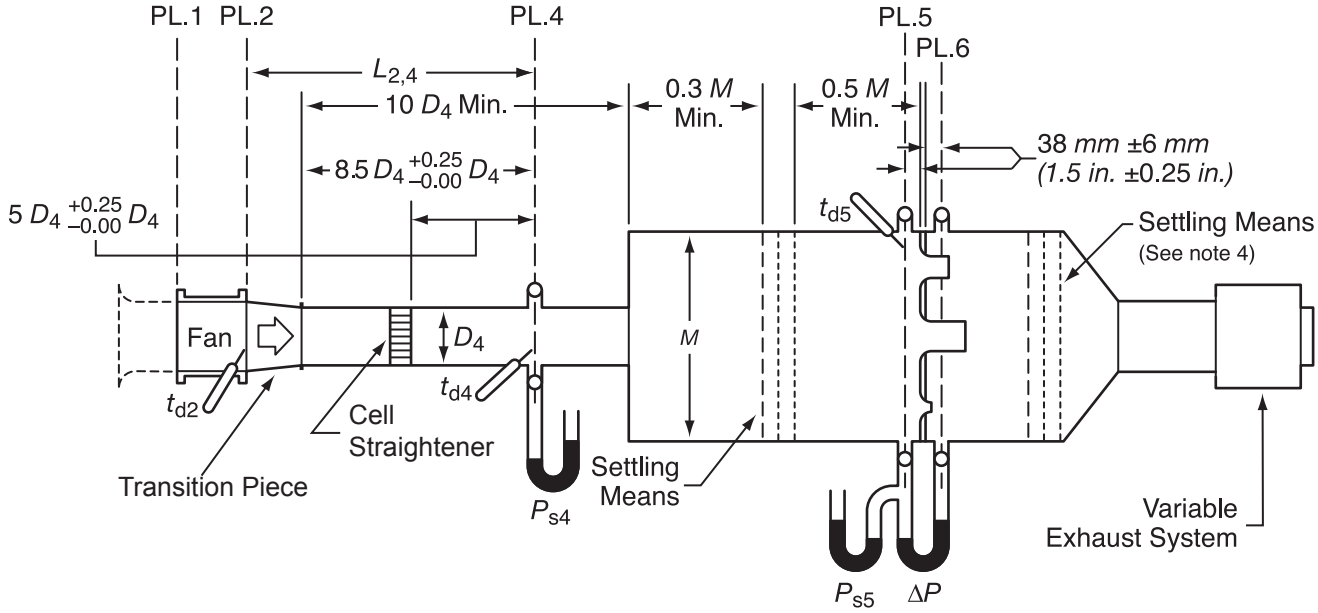

Notes:

1. Dotted lines on fan inlet indicate an inlet bell and one equivalent duct diameter, which may be used for inlet duct simulation. The duct friction shall not be considered.
2. Additional ductwork of any size, including elbows, may be used to connect between the chamber and the exit of the 10*D* minimum test duct.
3. Variable exhaust system may be an auxiliary fan or a throttling device.
4. The distance from the exit face of the largest nozzle to the downstream settling means shall be a minimum of 2.5 throat diameters of the largest nozzle.
5. Minimum (*M*) is determined by the requirements of Section 5.3.1 for this figure.

Flow and Pressure Formulae

$Q = Q_5\left(\frac{\rho_5}{\rho}\right)$	$P_t = P_{t2} - P_{t1}$	$P_v = P_{v4}\left(\frac{A_4}{A_2}\right)^2\left(\frac{\rho_4}{\rho_2}\right)$	$P_s = P_t - P_v$
$^*Q_5 = \sqrt{2}Y\sqrt{\frac{\Delta P}{\rho_5}}\sum(CA_6)$	$P_{t1} = 0$	$^*P_{v4} = \left(\frac{V_4}{\sqrt{2}}\right)^2 \rho_4$	
$V_4 = \left(\frac{Q}{A_4}\right)\left(\frac{\rho}{\rho_4}\right)$	$P_{t2} = P_{s4} + P_{v4} + f\left(\frac{L_{2,4}}{D_{h4}} + \frac{L_e}{D_{h4}}\right)P_{v4}$		

*These formulae are the same in both the SI and the I-P systems except for Q_5 and P_{v4}; in the I-P version, the constant $\sqrt{2}$ is replaced with the value 1097.8.

Figure 10A
Outlet Duct Setup — Multiple Nozzles In Chamber with Cell Straightener

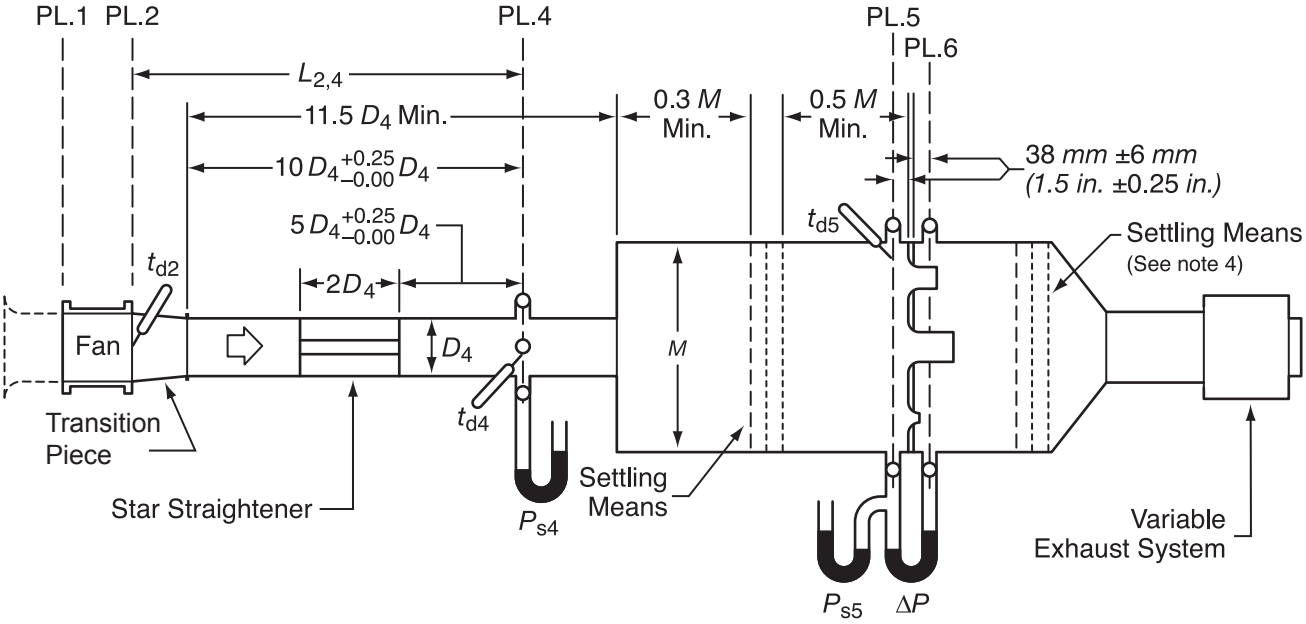

Notes:

1. Dotted lines on fan inlet indicate an inlet bell and one equivalent duct diameter, which may be used for inlet duct simulation. The duct friction shall not be considered.
2. Additional ductwork of any size, including elbows, may be used to connect between the chamber and the exit of the 11.5*D* minimum test duct.
3. Variable exhaust system may be an auxiliary fan or a throttling device.
4. The distance from the exit face of the largest nozzle to the downstream settling means shall be a minimum of 2.5 throat diameters of the largest nozzle.
5. Minimum (*M*) is determined by the requirements Section of 5.3.1 for this figure.

Flow and Pressure Formulae

$Q = Q_5\left(\frac{\rho_5}{\rho}\right)$	$P_t = P_{t2} - P_{t1}$	$P_v = P_{v4}\left(\frac{A_4}{A_2}\right)^2\left(\frac{\rho_4}{\rho_2}\right)$	$P_s = P_t - P_v$
$^*Q_5 = \sqrt{2}Y\sqrt{\frac{\Delta P}{\rho_5}}\sum(CA_6)$	$P_{t1} = 0$	$^*P_{v4} = \left(\frac{V_4}{\sqrt{2}}\right)^2 \rho_4$	
$V_4 = \left(\frac{Q}{A_4}\right)\left(\frac{\rho}{\rho_4}\right)$	$P_{t2} = P_{s4} + P_{v4} + f\left(\frac{L_{2,4}}{D_{h4}} - 2\right)P_{v4} + 0.95(\mathrm{Re})^{-0.12}P_{v4}$		

*These formulae are the same in both the SI and the I-P systems except for Q_5 and P_{v4}; in the I-P version, the constant $\sqrt{2}$ is replaced with the value 1097.8.

Figure 10B
Outlet Duct Setup — Multiple Nozzles In Chamber with Star Straightener

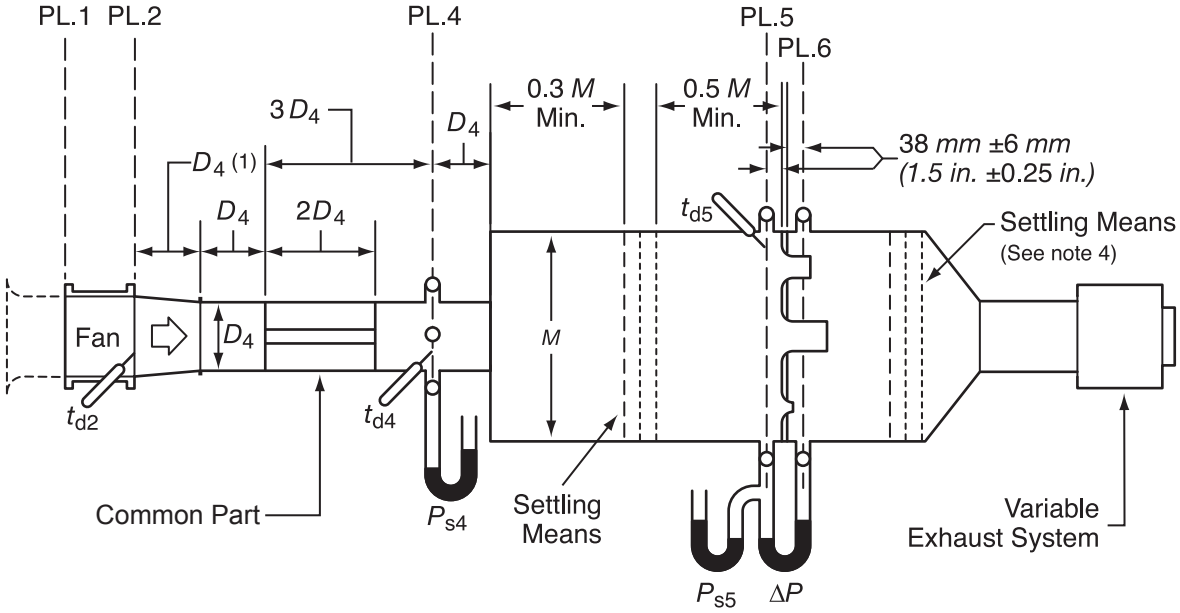

Notes:

1. Dotted lines on fan inlet indicate an inlet bell and one equivalent duct diameter which may be used for inlet duct simulation. The duct friction shall not be considered.
2. Additional ductwork of any size including elbows may be used to connect between the chamber and the exit of the test duct shown between the test fan and the chamber.
3. Variable exhaust system may be an auxiliary fan or a throttling device.
4. The distance from the exit face of the largest nozzle to the downstream settling means shall be a minimum of 2.5 throat diameters of the largest nozzle.
5. Minimum (*M*) is determined by the requirements of Section 5.3.1 for this figure.

Flow and Pressure Formulae

$Q = Q_5\left(\frac{\rho_5}{\rho}\right)$	$P_t = P_{t2} - P_{t1}$	$P_v = P_{v4}\left(\frac{A_4}{A_2}\right)^2\left(\frac{\rho_4}{\rho_2}\right)$	$P_s = P_t - P_v$
$^*Q_5 = \sqrt{2}Y\sqrt{\frac{\Delta P}{\rho_5}}\sum(CA_6)$	$P_{t1} = 0$	$^*P_{v4} = \left(\frac{V_4}{\sqrt{2}}\right)^2 \rho_4$	
$V_4 = \left(\frac{Q}{A_4}\right)\left(\frac{\rho}{\rho_4}\right)$	$P_{t2} = P_{s4} + P_{v4} + (0.015 + 1.26(\mathrm{Re})^{-0.3} + 0.95(\mathrm{Re})^{-0.12})P_{v4}$		

*These formulae are the same in both the SI and the I-P systems except for Q_5 and P_{v4}; in the I-P version, the constant $\sqrt{2}$ is replaced with the value 1097.8.

Figure 10C
Outlet Duct Setup – Multiple Nozzles In Chamber with Common Part

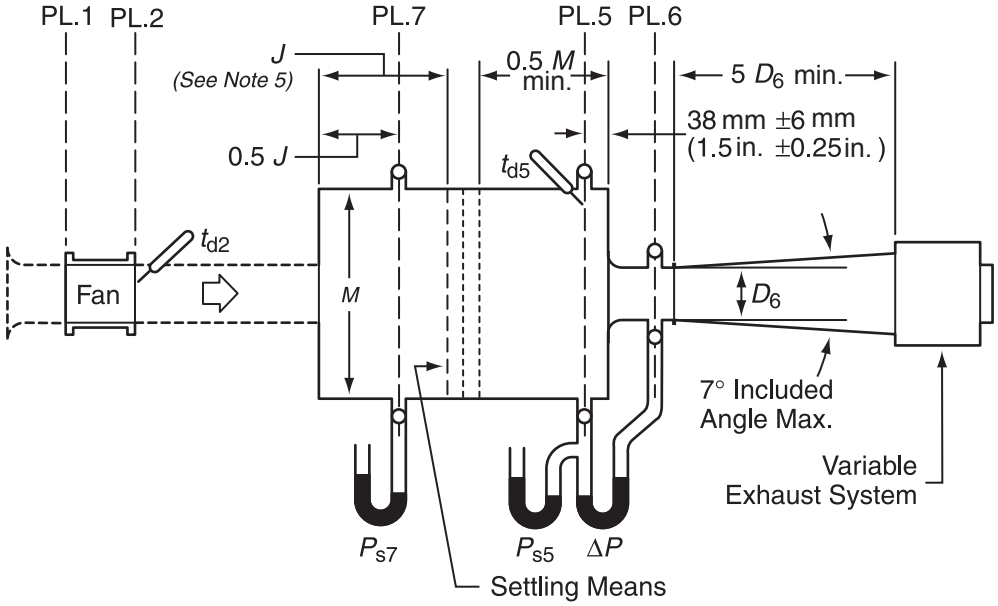

Notes:

1. Dotted lines on fan inlet indicate an inlet bell and one equivalent duct diameter, which may be used for inlet duct simulation. The duct friction shall not be considered.
2. Dotted lines on fan outlet indicate a uniform duct two to three equivalent diameters long and of an area within ±1% of the fan outlet area and a shape to fit the fan outlet. This may be used to simulate an outlet duct. The outlet duct friction shall not be considered.
3. The fan may be tested without outlet duct. If this is the case, it shall be mounted on the end of the chamber.
4. Variable exhaust system may be an auxiliary fan or a throttling device.
5. Dimension *J* shall be at least 1.0 times the fan equivalent discharge diameter for fans with axis of rotation perpendicular to the discharge flow and at least 2.0 times the fan equivalent discharge diameter for fans with axis of rotation parallel to the discharge flow. **Warning!** A small dimension *J* may make it difficult to meet the criteria given in Annex A. By making dimension *J* at least 0.35*M* this condition is improved, as well as meeting the criteria given in Section 5.3.1 for any fan.
6. Temperature t_{d2} may be considered equal to t_{d5}.
7. For the purpose of calculating the density at Plane 5 only, P_{s5} may be considered equal to P_{s7}.
8. Nozzle shall be in accordance with Figure 4A — Nozzle with Throat Taps

Flow and Pressure Formulae

$Q = Q_5\left(\frac{\rho_5}{\rho}\right)$	$P_t = P_{t2} - P_{t1}$	$P_v = P_{v2}$
$^*Q_5 = \sqrt{2}CA_6Y\sqrt{\frac{\Delta P}{\rho_5}}$	$P_{t1} = 0$	$^*P_{v2} = \left(\frac{V_2}{\sqrt{2}}\right)^2 \rho_2$
$V_2 = \left(\frac{Q}{A_2}\right)\left(\frac{\rho}{\rho_2}\right)$	$P_{t2} = P_{s7} + P_v$	$P_s = P_t - P_v$

*These formulae are the same in both the SI and the I-P systems except for Q_5 and P_{v2}; in the I-P version, the constant $\sqrt{2}$ is replaced with the value 1097.8.

Figure 11
Outlet Chamber Setup – Nozzle On End of Chamber

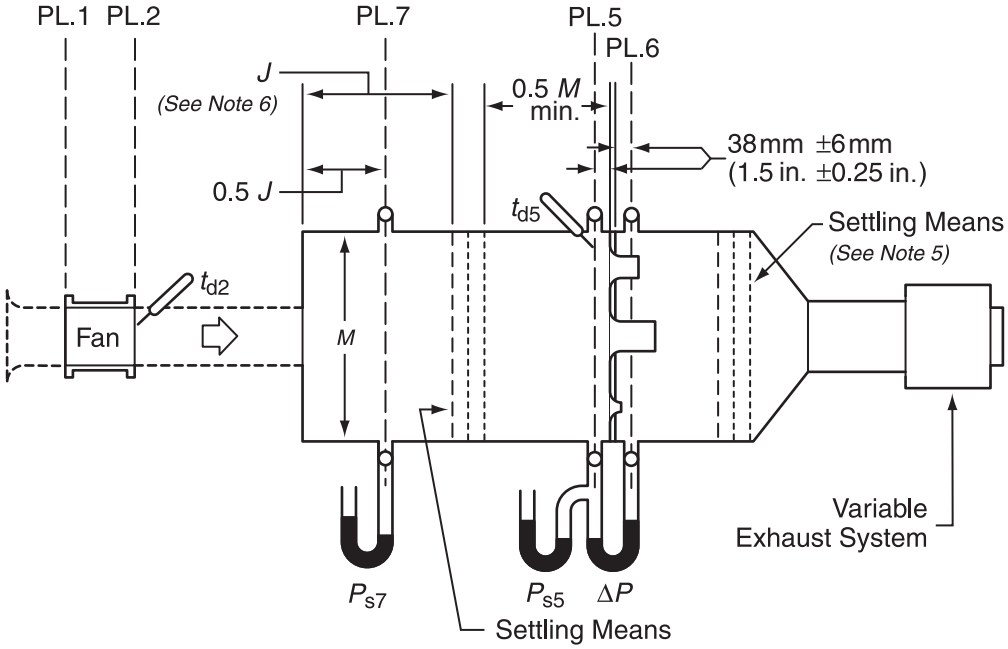

Notes:

1. Dotted lines on fan inlet indicate an inlet bell and one equivalent duct diameter, which may be used for inlet duct simulation. The duct friction shall not be considered.
2. Dotted lines on fan outlet indicate a uniform duct two to three equivalent diameters long and of an area within ±1% of the fan outlet area and a shape to fit the fan outlet. This may be used to simulate an outlet duct. The outlet duct friction shall not be considered.
3. The fan may be tested without outlet duct. If this is the case, it shall be mounted on the end of the chamber.
4. Variable exhaust system may be an auxiliary fan or a throttling device.
5. The distance from the exit face of the largest nozzle to the downstream settling means shall be a minimum of 2.5 throat diameters of the largest nozzle.
6. Dimension *J* shall be at least 1.0 times the fan equivalent discharge diameter for fans with axis of rotation perpendicular to the discharge flow and at least 2.0 times the fan equivalent discharge diameter for fans with axis of rotation parallel to the discharge flow. **Warning!** A small dimension *J* may make it difficult to meet the criteria given in Annex A. By making dimension *J* at least 0.35*M* this condition is improved, as well as meeting the criteria given in Section 5.3.1 for any fan.
7. Temperature t_{d2} may be considered equal to t_{d5}.
8. For the purpose of calculating the density at Plane 5 only, P_{s5} may be considered equal to P_{s7}.

Flow and Pressure Formulae

$Q = Q_5\left(\frac{\rho_5}{\rho}\right)$	$P_t = P_{t2} - P_{t1}$	$P_v = P_{v2}$
$^*Q_5 = \sqrt{2}Y\sqrt{\frac{\Delta P}{\rho_5}}\sum(CA_6)$	$P_{t1} = 0$	$^*P_{v2} = \left(\frac{V_2}{\sqrt{2}}\right)^2 \rho_2$
$V_2 = \left(\frac{Q}{A_2}\right)\left(\frac{\rho}{\rho_2}\right)$	$P_{t2} = P_{s7} + P_v$	$P_s = P_t - P_v$

*These formulae are the same in both the SI and the I-P systems except for Q_5 and P_{v2}; in the I-P version, the constant $\sqrt{2}$ is replaced with the value 1097.8.

Figure 12
Outlet chamber Setup — Multiple Nozzles In Chamber

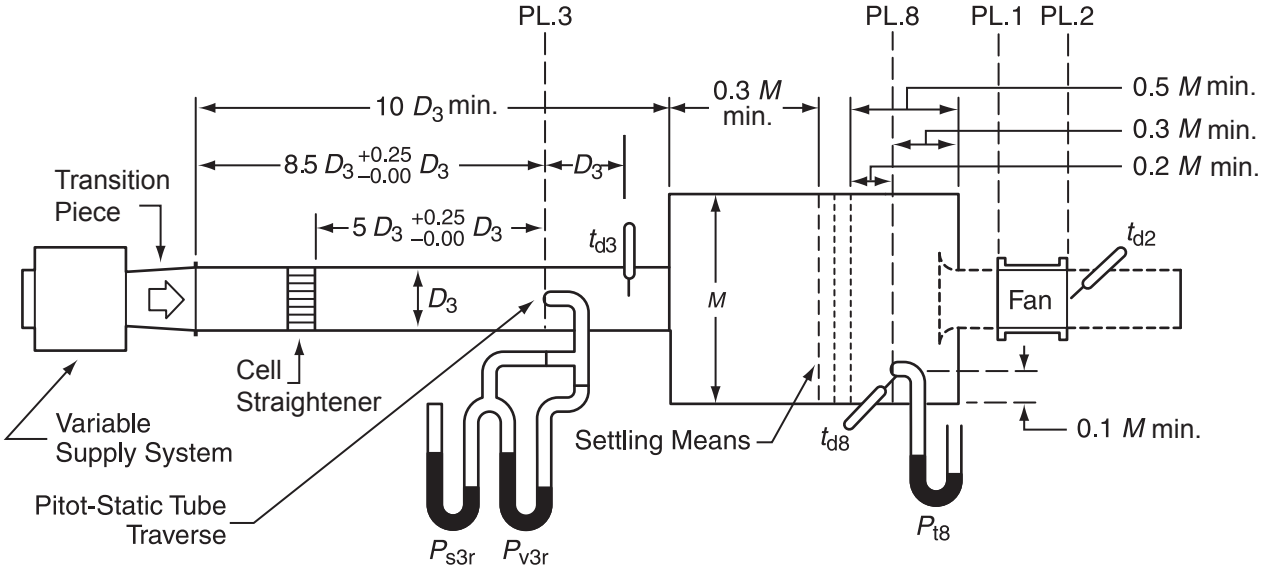

Notes:

1. Dotted lines on fan inlet indicate an inlet bell and one equivalent duct diameter, which may be used for inlet duct simulation. The duct friction shall not be considered.
2. Dotted lines on fan outlet indicate a uniform duct two or three equivalent diameters long and of an area within ±1 of the fan outlet area and a shape to fit the fan outlet. This may be used to simulate an outlet duct. The outlet duct friction shall not be considered.
3. Additional ductwork of any size including elbows may be used to connect between the chamber and the exit of the 10*D* minimum test duct.
4. Variable supply system may be an auxiliary fan or a throttling device.
5. In lieu of a total pressure tube, a piezometer ring can be used to measure static pressure at Plane 8. If this alternate arrangement is used, and the calculated Plane 8 velocity is greater than 400 fpm then the calculated Plane 8 velocity pressure shall be added to the measured static pressure.

Flow and Pressure Formulae

$Q = Q_3\left(\frac{\rho_3}{\rho}\right)$	$P_t = P_{t2} - P_{t1}$	$P_s = P_t - P_v$	$P_v = P_{v3}\left(\frac{A_3}{A_2}\right)^2\left(\frac{\rho_3}{\rho_2}\right)$
$Q_3 = V_3 A_3$	$P_{t1} = P_{t8}$	$P_{s3} = \frac{\sum P_{s3r}}{n}$	$P_{v3} = \left(\frac{\sum\sqrt{P_{v3r}}}{n}\right)^2$
$^*V_3 = \sqrt{2}\sqrt{\frac{P_{v3}}{\rho_3}}$	$P_{t2} = P_v$		

*These formulae are the same in both SI and I-P systems except for V_3; in the I-P version, the constant $\sqrt{2}$ is replaced with the value 1097.8.

Figure 13
Inlet Chamber Setup — Pitot Traverse in Duct

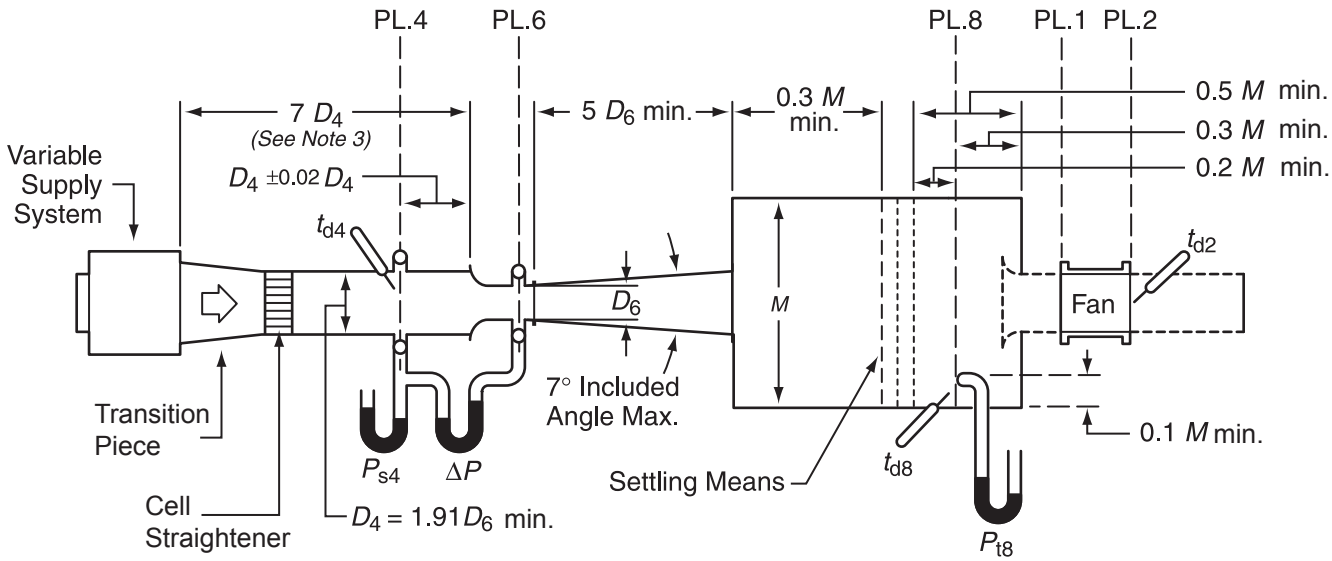

Notes:

1. Dotted lines on fan inlet indicate an inlet bell and one equivalent duct diameter, which may be used for inlet duct simulation. The duct friction shall not be considered.
2. Dotted lines on fan outlet indicate a uniform duct two to three equivalent diameters long and of an area within ±1% of the fan outlet area and a shape to fit the fan outlet. This may be used to simulate an outlet duct. The outlet duct friction shall not be considered.
3. Duct length 7*D*4 may be shortened to not less than 2*D*4 when it can be demonstrated, by a traverse of *D*4 by pitot-static tube located a distance *D*4 upstream from the nozzle entrance or downstream from the straightener or smoothing means, that the energy ratio (*E*) is less than 1.1 when the velocity is greater than 6.1 m/s (1200 fpm). Smoothing means such as screens, perforated plates or other media may be used.
4. Variable supply system may be an auxiliary fan or a throttling device. One or more supply systems, each with its own nozzle, may be used.
5. In lieu of a total pressure tube, a piezometer ring can be used to measure static pressure at Plane 8. If this alternate arrangement is used and the calculated Plane 8 velocity is greater than 400 fpm, then the calculated Plane 8 velocity pressure shall be added to the measured static pressure.
6. Nozzle shall be in accordance with Figure 4A — Nozzle with Throat Taps

Flow and Pressure Formulae

$$Q = Q_4\left(\frac{\rho_4}{\rho}\right)$$

$$P_t = P_{t2} - P_{t1}$$

$$P_v = P_{v2}$$

$$^*Q_4 = \frac{\sqrt{2}CA_6Y\sqrt{\frac{\Delta P}{\rho_4}}}{\sqrt{1-E\beta^4}}$$

$$P_{t1} = P_{t8}$$

$$^*P_{v2} = \left(\frac{V_2}{\sqrt{2}}\right)^2 \rho_2$$

$$V_2 = \left(\frac{Q}{A_2}\right)\left(\frac{\rho}{\rho_2}\right)$$

$$P_{t2} = P_v$$

$$P_s = P_t - P_v$$

*These formulae are the same in both the SI and I-P systems except for Q_4 and P_{v2}; in the I-P version, the constant $\sqrt{2}$ is replaced with the value 1097.8.

Figure 14
Inlet Chamber Setup — Ducted Nozzle on Chamber

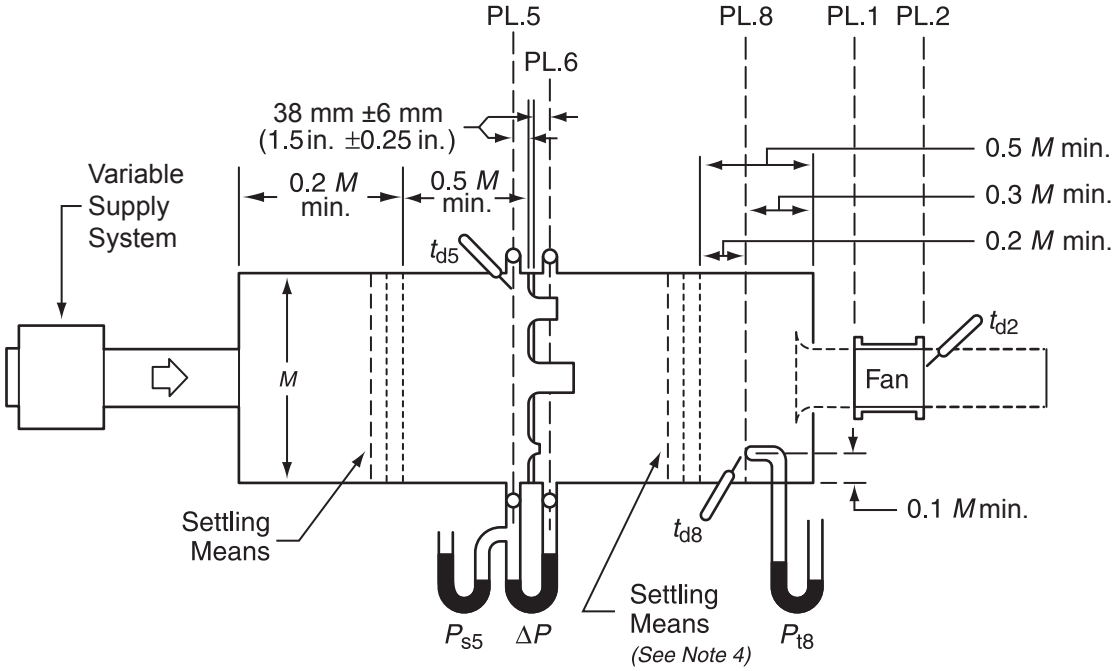

Notes:

1. Dotted lines on fan inlet indicate an inlet bell and one equivalent duct diameter, which may be used for inlet duct simulation. The duct friction shall not be considered.
2. Dotted lines on fan outlet indicate a uniform duct two to three equivalent diameters long and of an area within ±1% of the fan outlet area and a shape to fit the fan outlet. This may be used to simulate an outlet duct. The outlet duct friction shall not be considered.
3. Variable supply system may be an auxiliary fan or throttling device.
4. The distance from the exit face of the largest nozzle to the downstream settling means shall be a minimum of 2.5 throat diameters of the largest nozzle.
5. For the purpose of calculating the density at Plane 5 only, P_{s5} may be considered equal to ($P_{t8} + \Delta P$).
6. In lieu of a total pressure tube, a piezometer ring can be used to measure static pressure at Plane 8. If this alternate arrangement is used, and the calculated Plane 8 velocity is greater than 400 fpm, then the calculated Plane 8 velocity pressure shall be added to the measured static pressure.

Flow and Pressure Formulae

$Q = Q_5\left(\frac{\rho_5}{\rho}\right)$	$P_t = P_{t2} - P_{t1}$	$P_v = P_{v2}$
$^*Q_5 = \sqrt{2}Y\sqrt{\frac{\Delta P}{\rho_5}}\sum(CA_6)$	$P_{t1} = P_{t8}$	$^*P_{v2} = \left(\frac{V_2}{\sqrt{2}}\right)^2 \rho_2$
$V_2 = \left(\frac{Q}{A_2}\right)\left(\frac{\rho}{\rho_2}\right)$	$P_{t2} = P_v$	$P_s = P_t - P_v$

*These formulae are the same in both the SI and the I-P systems except for Q_5 and P_{v2}; in the I-P version, the constant $\sqrt{2}$ is replaced with the value 1097.8.

Figure 15
Inlet Chamber Setup — Multiple Nozzles In Chamber

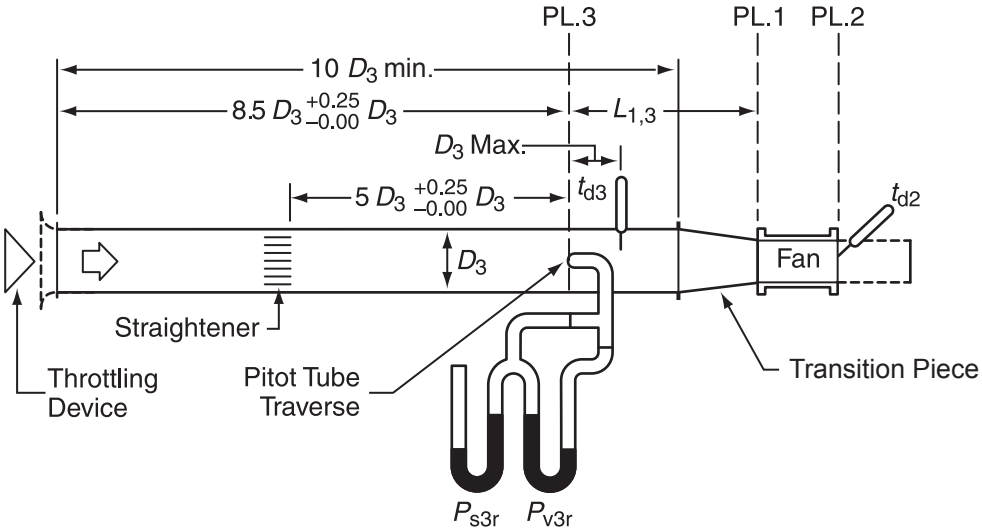

Notes:

1. Dotted lines on inlet indicate an inlet bell, which may be used to approach more nearly free delivery.
2. Dotted lines on fan outlet indicate a uniform duct two to three equivalent diameters long and of an area within ±1% of the fan outlet area and a shape to fit the fan outlet. This may be used to simulate an outlet duct. The outlet duct friction shall not be considered.

Flow and Pressure Formulae

$Q_3 = V_3 A_3$	$P_t = P_{t2} - P_{t1}$	$P_s = P_t - P_v$	$P_v = P_{v3}\left(\frac{A_3}{A_2}\right)^2\left(\frac{\rho_3}{\rho_2}\right)$
$Q = Q_3\left(\frac{\rho_3}{\rho}\right)$	$P_{t1} = P_{s3} + P_{v3} - f\left(\frac{L_{1,3}}{D_{h3}}\right)P_{v3}$	$P_{s3} = \frac{\sum P_{s3r}}{n}$	$P_{v3} = \left(\frac{\sum\sqrt{P_{v3r}}}{n}\right)^2$
$^*V_3 = \sqrt{2}\sqrt{\frac{P_{v3}}{\rho_3}}$	$P_{t2} = P_v$		

*The formulae given above are the same in both the SI and the I-P systems except for V_3; in the I-P version, the constant $\sqrt{2}$ is replaced with the value 1097.8.

Figure 16
Inlet Duct Setup — Pitot Traverse In Inlet Duct

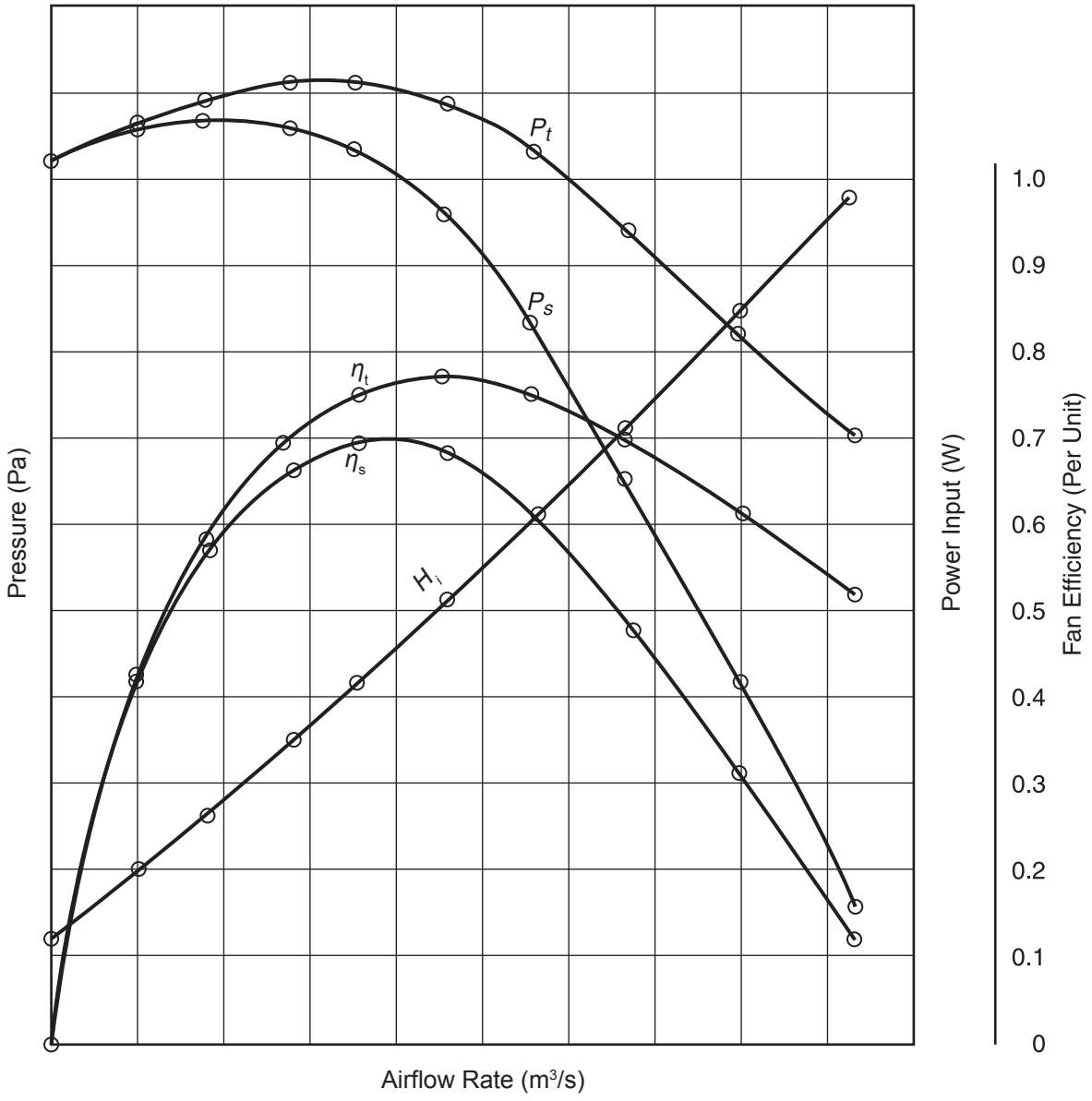

Figure 17A
Example of Typical Fan Performance Curve (SI)

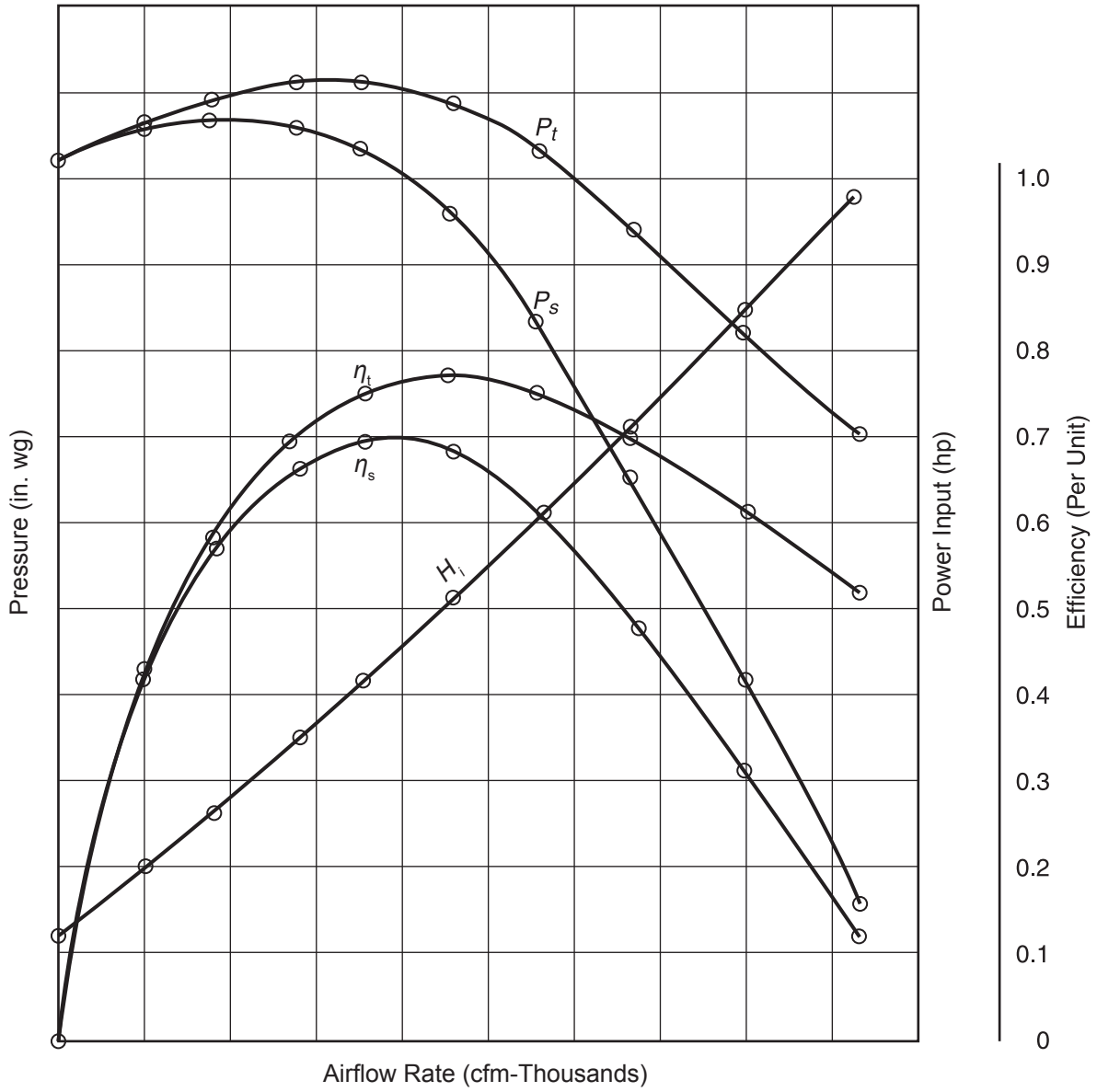

Figure 17B
Example of Typical Fan Performance Curve (I-P)

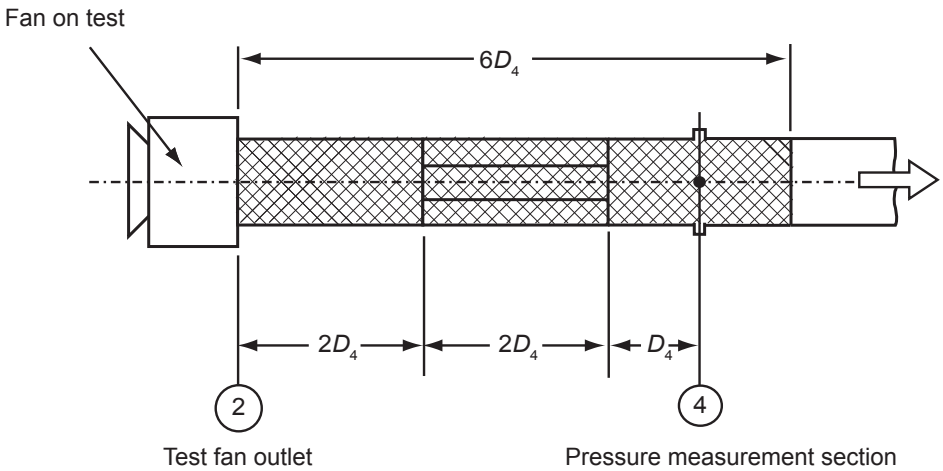

Figure 18
Common Part for Circular Fan Outlet When $D_2 = D_4$ [21]

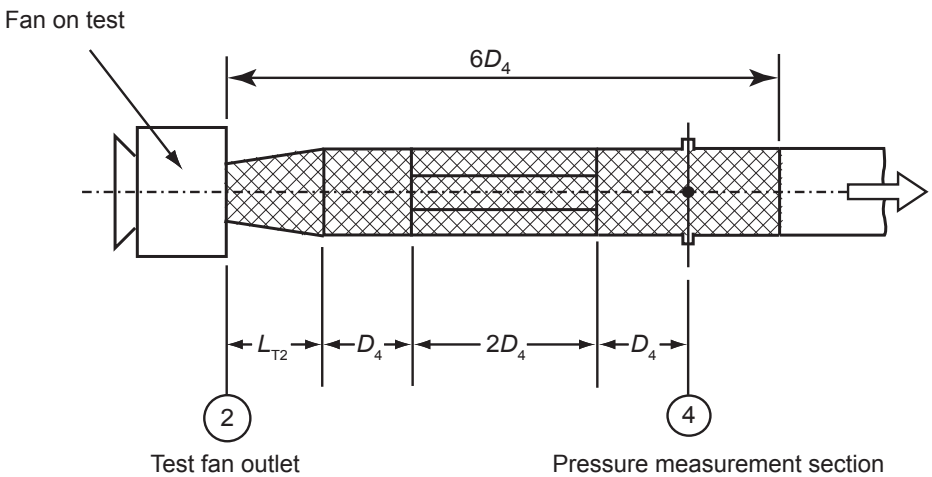

$$0.95 \le \left(\frac{D_4}{D_2}\right)^2 \le 1.07$$

$$L_{T2} = D_4$$

Figure 19
Common Part For Circular Fan Outlet When $D_2 \neq D_4$ [21]

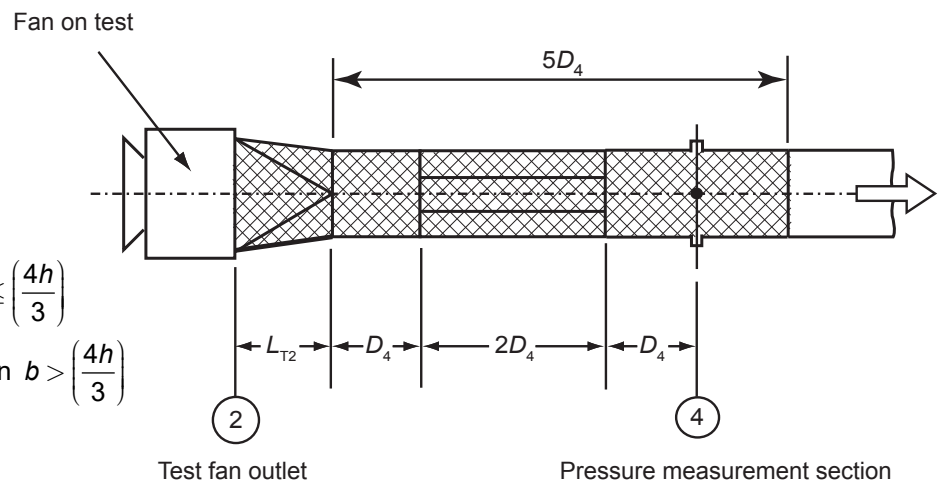

$$0.95 \le \left(\frac{\pi D_4^2}{4bh}\right) \le 1.07$$

$$L_{T2} = 1.0D_4 \text{ when } b \le \left(\frac{4h}{3}\right)$$

$$L_{T2} = 0.75\left(\frac{b}{h}\right)D_4 \text{ when } b > \left(\frac{4h}{3}\right)$$

Note: The dimensions *b* and *h* are the width and height of a rectangular section of a duct.

Figure 20
Common Part for Rectangular Fan Outlet Where $b \ge h$ [21]

Annex A
Airflow Settling Means Effectiveness Check (Normative)

A.1 General requirements

The effectiveness of the airflow settling means in all chambers shall be verified by tests. The tests are described in Sections A.2, A.3 and A.4. Each style of chamber has different conditions, and the required tests are defined for each in these sections.

Some validation tests require that the flow and pressure be determined prior to the settling means having proved their effectiveness. It can be assumed that the tests taken in this condition (with the non-verified settling means) are sufficiently accurate to be used to establish acceptance criteria for all Annex A testing.

Once the airflow settling means have demonstrated that all applicable test criteria have been met, the chamber can be used for all future testing within the limits defined by the test criteria. If any of the criteria are not met, the settling means must be altered and all testing restarted.

A.2 Piezometer ring check (optional)

This test applies chambers per Figures 9A, 9B, 9C, 10A, 10B and 10C in Plane 5; Figures 11 and 12 in Planes 5 and 7; and Figure 15 in Plane 5.

Individual pressure readings for each pressure tap of the piezometer ring are to be measured. When the mean of these readings is less than or equal to 1000 Pa (4 in. wg), all of the individual readings must be within 5% of the mean. When the mean of these readings is greater than 1000 Pa (4 in. wg) all of the individual readings must be within 2% of the mean.

A.3 Blow through verification test

This test applies to chambers per Figures 9A, 9B, 9C, 10A, 10B, 10C, 11, 12 and 15 in Plane 5; and Figures 13, 14 and 15 in Plane 8.

This test evaluates the ability of the airflow settling means to provide a substantially uniform airflow ahead of the measurement plane. For this test, equally spaced measurement points are located in a plane 0.1*M* downstream of the settling means. The number of measurement points shall be in accordance with AMCA Publication 203.

For tests of settling means upstream of the nozzle wall, the auxiliary fan shall be set at its maximum flow rate, all the nozzles shall be open, the inlet of the chamber shall be open and the inlet area shall be equal to the largest area allowed by the chamber cross-sectional area.

For tests of settling means upstream of the test fan, the auxiliary fan shall be set at its maximum flow rate, half of the nozzles shall be open, the outlet of the chamber shall be open and the outlet area shall be equal to the largest area allowed by the chamber cross sectional area.

The flow velocities shall be measured, and the average determined. If the maximum velocity is less than 2 m/s (400 fpm) or if the maximum velocity value does not exceed 125% of the average, the settling screens are acceptable.

A.4 Reverse flow verification test

One purpose of the settling means is to absorb the kinetic energy of an upstream jet and allow its normal expansion as if in an unconfined space. This requires some backflow to supply the air to mix at the jet boundaries. If the settling means are too restrictive, excessive backflow will result.

A series of tests shall be run to verify that reverse flow is not excessive at Plane 7. Each test shall be run with a varying opening in the chamber entrance starting from 11% of the chamber area and proceeding to lower percentage openings. Each test shall be run with all of the nozzles open and the auxiliary at its maximum flow rate. At each test, it shall be verified that the pressure at Plane 5 is less than the pressure at Plane 7. The series of tests may be stopped at the first set of conditions that verify the above requirement.

The volume of interest is the volume between the measurement plane and the air moving device. For an inlet chamber, the test pressure could be negative, and for outlet chambers, the test pressures could be positive.

Two methods of testing for leakage rate are proposed. These test procedures assume isothermal conditions.

B.1 Pressure decay method

Figure B.1 shows the test setup. The test chamber is pressurized and the valve is closed. The initial static pressure is noted (P_0) at time $t = 0$. The pressure is recorded at periodic intervals (at intervals short enough to develop a pressure vs. time curve) until the pressure (P) reaches a steady state value.

Using ideal gas law:

$$PV = m\mathrm{R}T \text{ or } P = \rho\mathrm{R}T \qquad \text{Eq. B.1}$$

Where P = Static pressure
V = Chamber volume
m = mass of air in chamber
R = Gas constant
T = Absolute air temperature
ρ = Air density
Q = Leakage airflow rate

Differentiating with respect to time:

$$V\frac{dP}{dt} = \frac{dm}{dt}\mathrm{R}T$$

And:

$$Q = \left(\frac{1}{\rho}\right)\left(\frac{dm}{dt}\right) \text{ or } \frac{dm}{dt} = \rho Q$$

Substituting and rearranging gives:

$$\frac{dP}{dt} = \frac{\rho Q\mathrm{R}T}{V}$$

Or:

$$Q = \left(\frac{V}{\rho\mathrm{R}T}\right)\left(\frac{dP}{dt}\right)$$

And:

$$Q = \left(\frac{V}{P}\right)\left(\frac{dP}{dt}\right)$$

Or:

$$Q = \left(\frac{V}{P_t}\right)\left(\frac{\Delta P_t}{\Delta t}\right) \qquad \text{Eq. B.2}$$

Thus, leakage rate (Q) can be determined from Equation B.2 once the pressure decay curve (Figure B.2) is known for the chamber.

1. Pressurize or evacuate the test chamber to a test pressure (P_t) greater in magnitude than the pressure at which leakage is to be measured. Close the control valve.

2. At time $t = 0$, start a stopwatch and record the pressure at periodic time intervals (a minimum of three readings is recommended) to get a decay curve as above. Continue to record until the pressure reaches a state in which the pressure does not change significantly.

3. Quick pressure changes indicate substantial leakage which must be located and may have to be reduced.

B.2 Flow meter method

Figure B.3 shows the test setup. The procedure is to pressurize or evacuate the test chamber and use a flow meter to establish the leakage flow rate. The pressure in the chamber is maintained constant. The flow meter will give a direct reading of the leakage rate.

The source used to evacuate or pressurize the chamber must be sized to maintain a constant pressure in the chamber.

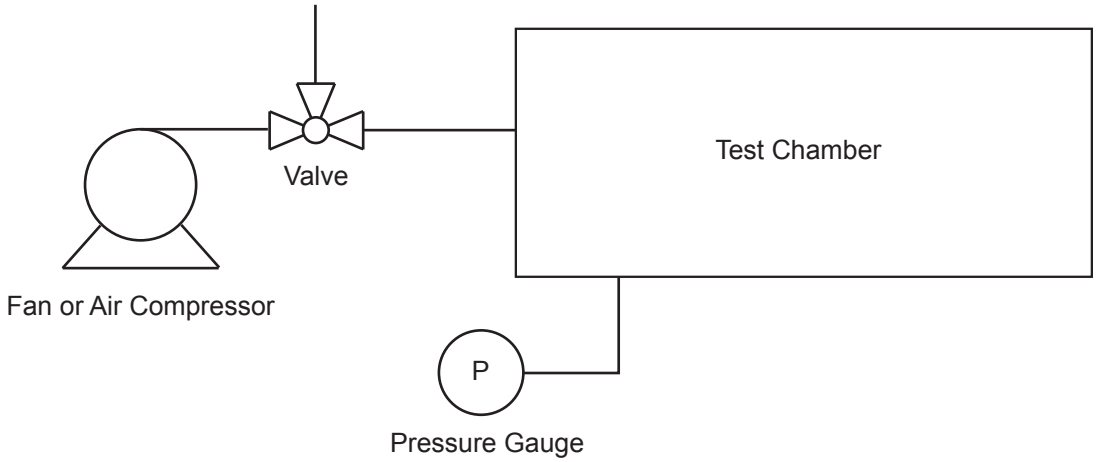

Figure B.1
Pressure Decay Leakage Method Setup

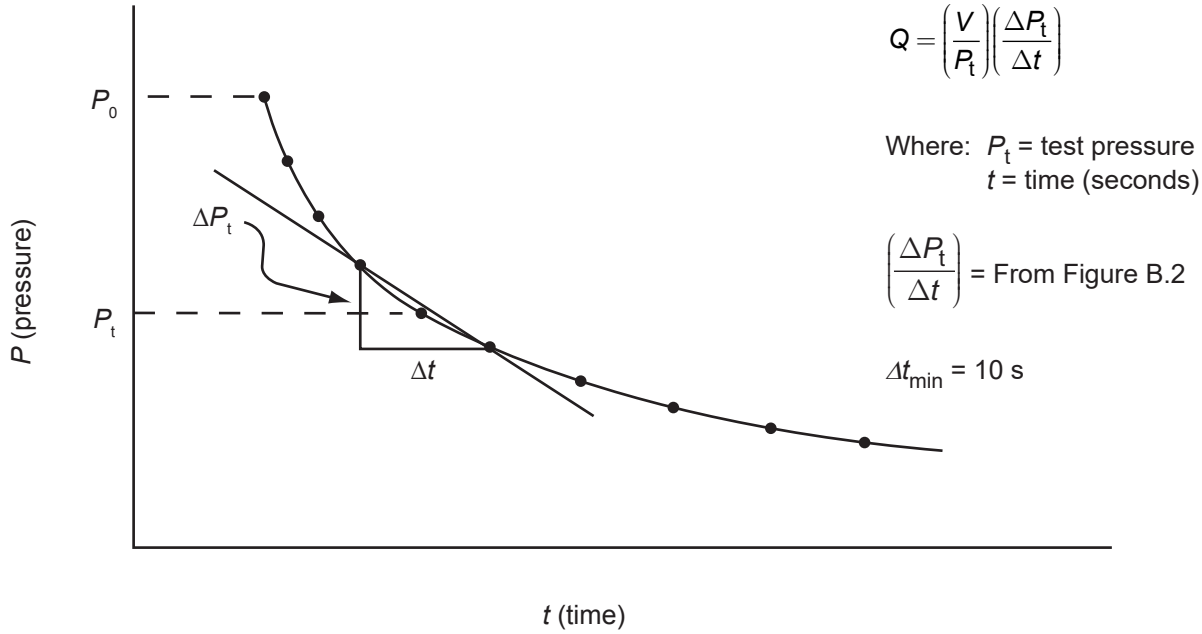

Figure B.2
Pressure Decay History

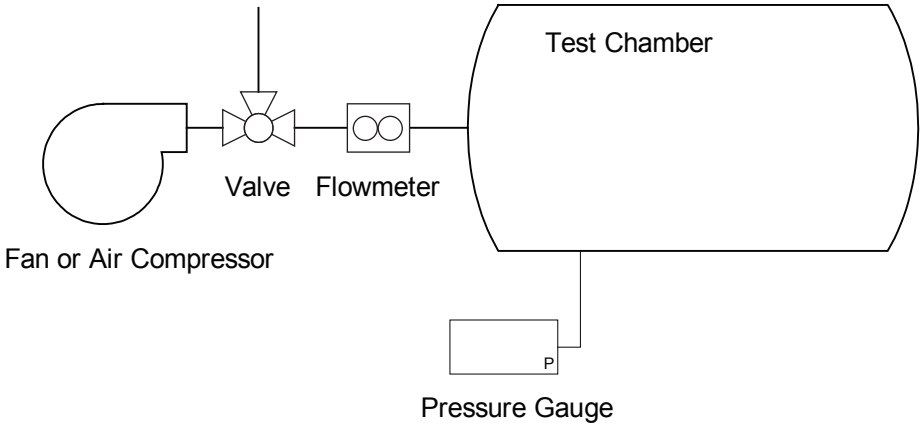

Figure B.3
Leakage Test Setup, Flow Meter Method

Annex C
Tubing (Informative)

Large tubing shall be used to help prevent blockage from dust, water, ice, etc. Accumulations of dirt are especially noticeable in the bottom of round ducts; it is recommended that duct piezometer fittings be located at 45° from the horizontal. Tubing longer than 1.5 m (5 ft) shall be a minimum of 6 mm (0.25 in.) inside diameter to avoid long pressure response times. When pressure response times are long, inspect for possible blockage.

Hollow flexible tubing used to connect measurement devices to measurement locations shall be of relatively large inside diameter. The larger size is helpful in preventing blockage due to dust, water, ice, etc.

Piezometer connections to a round duct are recommended to be made at points 45° away from the vertical centerline of the duct. See Figure C.1 for an example.

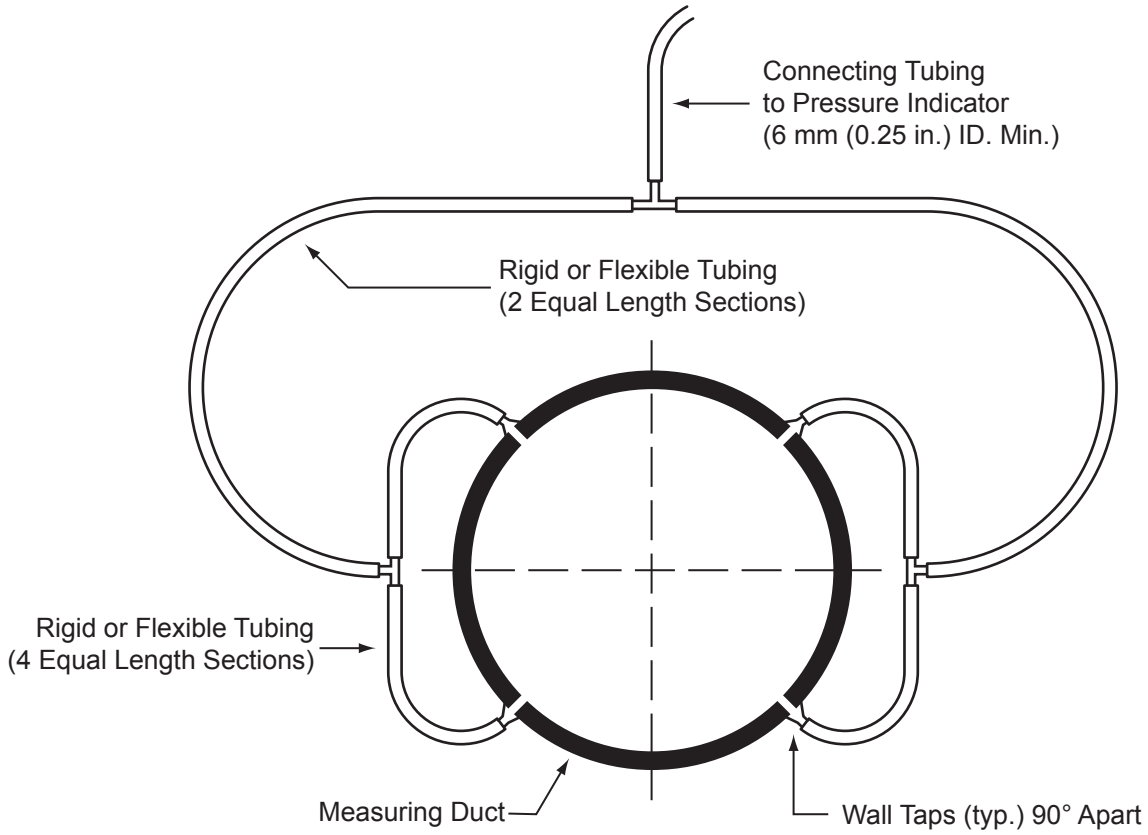

Notes:

1. Static pressure taps shall be in accordance with Figure 2A.
2. Manifold tubing internal area shall be at least four times that of a wall tap.
3. Connecting tubing to pressure indicator shall be 6 mm (0.25 in.) or larger in ID.
4. Taps shall be within ± 13 mm (0.5 in.) in the longitudinal direction.

Figure C.1
Piezometer Ring Manifolding

Annex D
Derivations of Equations (Informative)

D.1 General

Various formulae appear in the standard. The origin of these formulae will be obvious to an engineer. Some, like the equations for α, β, P_t, P_s and P_v, are algebraic expressions of fundamental definitions. Others, like the equations for p_e, μ and C, are simply polynomials derived to fit the indicated data. Still others are derived from the equation of state, the Bernoulli equation, the equation of continuity and other fundamental considerations. Only the less obvious formulae will be derived here, using SI units of measure.

D.2 Symbols

In the derivations which follow, certain symbols and notations are used in addition to those which are also used in the standard.

Symbol	Description	Unit
H_i	Power input to impeller	W (hp)
n	Polytropic exponent	dimensionless
P	Absolute total pressure	Pa (in. wg)

D.3 Fan total efficiency equation

The values of the fan airflow rate, fan total pressure and fan input power, which are determined during a test, are the compressible flow values for the fan speed and fan air density prevailing. A derivation of the fan total efficiency equation based on compressible flow values follows [20].

The process during compression may be plotted on a chart of absolute total pressure (P) versus flow rate (Q). By using total pressure, all of the energy is accounted for including kinetic energy.

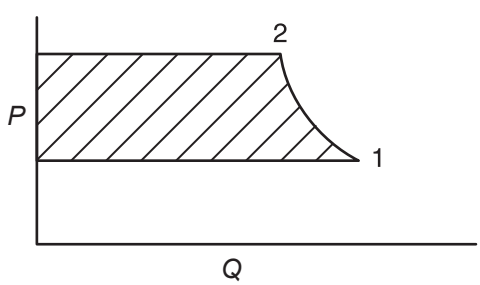

The fan output power(H_o) is proportional to the shaded area which leads to:

$$H_o = \frac{1}{6343.3}\int_1^2 QdP \qquad \text{Eq. D.1}$$

The compression process may be assumed to be polytropic for which, from thermodynamics:

$$Q = Q_1\left(\frac{P}{P_1}\right)^{-1/n} \qquad \text{Eq. D.2}$$

Substituting:

$$H_o = \frac{Q_1}{6343.3}\int_1^2 \left(\frac{P}{P_1}\right)^{-1/n} dP \qquad \text{Eq.D.3}$$

Integrating between limits:

$$H_o = \frac{Q_1P_1}{6343.3}\left(\frac{n}{n-1}\right)\left[\left(\frac{P_2}{P_1}\right)^{(n-1)/n} - 1\right] \qquad \text{Eq. D.4}$$

But from the definition of fan total pressure (P_t):

$$P_1 = \frac{P_t}{\left(\frac{P_2}{P_1} - 1\right)} \qquad \text{Eq. D.5}$$

And the definition of fan total efficiency (η_t):

$$\eta_t = \frac{H_o}{H_i} \qquad \text{Eq. D.6}$$

It follows that:

$$\eta_t = \frac{\frac{Q_1P_t}{6343.3H_i}\left(\frac{n}{n-1}\right)\left[\left(\frac{P_2}{P_1}\right)^{(n-1)/n} - 1\right]}{\left(\frac{P_2}{P_1} - 1\right)} \qquad \text{Eq. D.7}$$

D.4 Compressibility coefficient

The efficiency equation derived above can be rewritten:

$$\eta_t = \frac{Q_1P_tK_p}{H_i} \qquad \text{Eq. D.8 SI}$$

$$\eta_t = \frac{Q_1P_tK_p}{6343.3H_i} \qquad \text{Eq. D.8 I-P}$$

Where:

$$K_p = \frac{\left(\frac{n}{n-1}\right)\left[\left(\frac{P_2}{P_1}\right)^{(n-1)/n} - 1\right]}{\left(\frac{P_2}{P_1} - 1\right)} \qquad \text{Eq. D.9}$$

This is one form of the compressibility coefficient.

D.5 Derivation of K_p in terms of x and z

The compressibility coefficient (K_p) was derived above in terms of the polytropic exponent (n) and the pressure ratio (P_2/P_1). The polytropic exponent can be evaluated from the isentropic exponent (γ) and the polytropic efficiency. The latter may be considered equal to the fan total efficiency for a fan without drive losses. From thermodynamics:

$$\left(\frac{n}{n-1}\right) = \eta_t \left(\frac{\gamma}{\gamma - 1}\right) \qquad \text{Eq. D.10}$$

Two new coefficients (x and z), may be defined in terms of the information which is known from a fan test:

$$x = \frac{P_t}{P_1} \qquad \text{Eq. D.11}$$

And:

$$z = \left(\frac{\gamma - 1}{\gamma}\right)\left(\frac{H_i}{Q_1 P_1}\right) \qquad \text{Eq. D.12 SI}$$

$$z = \left(\frac{\gamma - 1}{\gamma}\right)\left(\frac{6343.3 H_i}{Q_1 P_1}\right) \qquad \text{Eq. D.12 I-P}$$

Manipulating algebraically:

$$\left(\frac{\gamma}{\gamma - 1}\right) = \frac{x}{z}\left(\frac{H_i}{Q_1 P_t}\right) \qquad \text{Eq. D.13 SI}$$

And:

$$\left(\frac{\gamma}{\gamma - 1}\right) = \frac{x}{z}\left(\frac{6343.3 H_i}{Q_1 P_t}\right) \qquad \text{Eq. D.13 I-P}$$

And:

$$\frac{P_2}{P_1} = (1 + x) \qquad \text{Eq. D.14}$$

Substituting in the equation for K_p:

$$K_p = \frac{\eta_t \frac{x}{z}\left(\frac{H_i}{Q_1 P_t}\right)\left[(1+x)^{(\gamma-1)/\gamma\eta_t} - 1\right]}{(1+x) - 1} \qquad \text{Eq. D.15 SI}$$

$$K_p = \frac{\eta_t \frac{x}{z}\left(\frac{6343.3 H_i}{Q_1 P_t}\right)\left[(1+x)^{(\gamma-1)/\gamma\eta_t} - 1\right]}{(1+x) - 1} \qquad \text{Eq. D.15 I-P}$$

This reduces to:

$$(1 + z) = (1 + x)^{(\gamma-1)/\gamma\eta_t} \qquad \text{Eq. D.16}$$

Taking logarithms and rearranging:

$$\eta_t = \left(\frac{\gamma - 1}{\gamma}\right)\left(\frac{\ln(1+x)}{\ln(1+z)}\right) \qquad \text{Eq. D.17}$$

Substituting:

$$\eta_t = \left(\frac{Q_1 P_t}{H_i}\right)\left(\frac{z}{x}\right)\left(\frac{\ln(1+x)}{\ln(1+x)}\right) \qquad \text{Eq. D.18 SI}$$

$$\eta_t = \left(\frac{Q_1 P_t}{6343.3 H_i}\right)\left(\frac{z}{x}\right)\left(\frac{\ln(1+x)}{\ln(1+x)}\right) \qquad \text{Eq. D.18 I-P}$$

And:

$$K_p = \left(\frac{z}{x}\right)\left(\frac{\ln(1+x)}{\ln(1+z)}\right) \qquad \text{Eq. D.19}$$

Since the coefficients x and z have been defined in terms of test quantities, direct solutions of K_p and η_t can be obtained for a test situation. An examination of x and z will reveal that x is the ratio of the total pressure rise to the absolute total pressure at the inlet, and that z is the ratio of the total temperature rise to the absolute total temperature at the inlet. If the total temperature rise could be measured with sufficient accuracy, it could be used to determine z, but in most cases, better accuracy is obtained from the other measurements.

D.6 Conversion equations

The conversion equations that appear in Section 7.9.3 of the standard are simplified versions of the fan laws which are derived in Annex E. Diameter ratio has been omitted in Section 7.9.3 because there is no need for size conversions in a test standard.

D.7 Derivation of constants used in I-P system formulae

The formulae given in the I-P system incorporate constants needed for unit cancellation. Their derivation is as follows:

D.7.1

The constant 13.595 is used in Equations 7.4 I-P, 7.5 I-P, 7.11 I-P, 7.54 I-P and 7.55 I-P. These formulae use absolute pressure ratios in inches of water. The barometric pressure is given in inches of mercury. The standard density of mercury is 13595.1 kg/m^3. Using the formula $P = \rho g H$ and converting to the I-P system, we find:

$$P = 13595.1\,\text{kg/m}^3 \times 9.80665\,\text{N/m}^3 \times 1.0\,\text{in.} \times \frac{1.0\,\text{m}}{39.37\,\text{in.}} \times \frac{1.0\,\text{in. wg}}{249.089\,\text{Pa}} = 13.595\,\text{in. wg}$$

D.7.2

The constant 1097.8 is used in Equations 7.8 I-P, 7.18 I-P, 7.21 I-P, 7.22 I-P, 7.27 I-P, 7.28 I-P, 7.31 I-P, E.23 I-P, E.25 I-P, E.27 I-P, E.28 I-P and in Figures 7A, 7B, 8A, 8B, 9A, 9B, 9C, 10A, 10B, 10C, 11, 12, 13 and 14. This constant is derived by converting to the SI equivalent units:

$$V\left(\frac{0.3048\,\text{m}}{1\,\text{ft}}\right)\left(\frac{1\,\text{min}}{60\,\text{s}}\right) = \sqrt{\left(\frac{2P_\text{v} \times 249.089\,\text{Pa}}{1.0\,\text{in.wg}}\right)\left(\frac{1.0\,\text{lbm/ft}^3}{\rho \times 16.018\,\text{kg/m}^3}\right)}$$

This gives: $V = 1097.8\sqrt{\frac{P_\text{v}}{\rho}}$

D.7.3

The constant 6343.3 is used in Equations 7.53 I-P, 7.55 I-P, 7.57 I-P, D.1, D.3, D.7, D.8 I-P, D.12 I-P, D.13 I-P, D.15 I-P, D.18 I-P, E.10 I-P, E.11 I-P, E.14 I-P, E.1 I-P and E.21 I-P. This constant is derived by converting to the SI equivalent units:

$$\eta_\text{t} = Q\left(\frac{0.3048\,\text{m}}{1\,\text{ft}}\right)^3\left(\frac{1\,\text{min}}{60\,\text{s}}\right)\left(\frac{P_t \times 249.089\,\text{Pa}}{1.0\,\text{in.wg}}\right) \times \left(\frac{1.0\,\text{hp}}{H_i \times 745.7\,\text{W}}\right) = \left(\frac{Q \times P_\text{t}}{H_i \times 6343.3}\right)$$

D.7.4

The constant 5.2014 is used in Equation 7.12 I-P. This constant is derived by converting to the SI equivalent units:

$$\alpha = 1 - \left(\frac{\Delta P \times 249.089\,\text{Pa}}{1.0\,\text{in.wg}}\right)\left(\frac{1.0\,\text{lbm/ft}^3}{\rho_x \times 16.018\,\text{kg/m}^3}\right) \times \left(\frac{53.35\,\text{ft} \times \text{lb/lbm} \times {}^\circ\text{R}}{R \times 287.1\,\text{J/kg} \times \text{K}}\right)\left(\frac{1.8\,{}^\circ\text{R}}{(t_\text{dx} + 459.67) \times 1.0\,\text{K}}\right)$$

$$\alpha = 1 - \left(\frac{5.2014 \times \Delta P}{\rho_\text{x} \times R(t_\text{dx} + 459.67)}\right)$$

Annex E
Similarity and Fan Laws (Informative)

E.1 Similarity

Two fans that are similar and have similar airflow conditions will have similar performance characteristics. The degree of similarity of the performance characteristics will depend on the degree of similarity of the fans and of the airflow through the fans.

E.1.1 Geometric similarity

Complete geometric similarity requires that the ratios of all corresponding dimensions for the two fans be equal. This includes ratios of thicknesses, clearances and roughness, as well as all the other linear dimensions of the airflow passages. All corresponding angles must be equal.

E.1.2 Kinematic similarity

Complete kinematic similarity requires that the ratios of all corresponding velocities for the two fans be equal. This includes the ratios of the magnitudes of corresponding velocities of the air and corresponding peripheral velocities of the impeller. The directions and points of application of all corresponding vectors must be the same.

E.1.3 Dynamic similarity

Complete dynamic similarity requires that the ratios of all corresponding forces in the two fans be equal. This includes ratios of forces due to elasticity, dynamic viscosity, gravity, surface tension and inertia, as well as the pressure force. The directions and points of application of all corresponding vectors must be the same.

E.2 Symbols

In the derivations that follow, certain symbols and notations are used in addition to those which are used in the standard.

Symbol	Description	Unit
n	Polytropic exponent	dimensionless
P	Absolute total pressure	Pa (in. wg)
$\overline{Q}$	Mean flow rate	m^3/s (cfm)
' (Prime)	Incompressible value	----------

E.3 Fan laws for incompressible flow

The fan laws are the mathematical expressions of the similarity of performance for similar fans at similar flow conditions. These laws may be deduced from similarity considerations, dimensional analysis, or various other lines of reasoning [22].

E.3.1 Fan total efficiency

The efficiencies of completely similar fans at completely similar flow conditions are equal. This is the fundamental relationship of the fan laws. It emphasizes the fact that the fan laws can be applied only if the points of operation are similarly situated for the two fans being compared. The fan law equation for fan total efficiency (η_t) is, therefore:

$$\eta_{tc} = \eta_t \qquad \text{Eq. E.1}$$

E.3.2 Fan airflow rate

The requirements of kinematic similarity lead directly to the airflow rate relationships expressed by the fan laws. Air velocities must be proportional to peripheral velocities. Since flow rate is proportional to air velocity times flow area, and since area is proportional to the square of any dimension, say impeller diameter (D), it follows that the fan law equation for fan airflow rate (Q) is:

$$Q_c = Q\left(\frac{D_c}{D}\right)^3\left(\frac{N_c}{N}\right) \qquad \text{Eq. E.2}$$

E.3.3 Fan total pressure

The requirements of dynamic similarity lead directly to the pressure relationships expressed by the fan laws. Pressure forces must be proportional to inertia forces. Since inertia force per unit area is proportional to air density (ρ) and air velocity squared and since air velocity is proportional to peripheral speed, it follows that the fan law equation for fan total pressure (P_t), which is also force per unit area, is:

$$P_{tc} = P_t\left(\frac{D_c}{D}\right)^2\left(\frac{N_c}{N}\right)^2\left(\frac{\rho_c}{\rho}\right) \qquad \text{Eq. E.3}$$

E.3.4 Fan input power

For incompressible flow, the compressibility coefficient is unity and power input is proportional to airflow rate times pressure divided by efficiency. From the above fan law relationships for fan airflow rate, fan total pressure and fan total efficiency, it follows that the fan law equation for fan input power (H_i) is:

$$H_c = H_i\left(\frac{D_c}{D}\right)^5\left(\frac{N_c}{N}\right)^3\left(\frac{\rho_c}{\rho}\right) \qquad \text{Eq. E.4}$$

E.3.5 Fan velocity pressure

The fan law equation for fan velocity pressure (P_v) follows from that for fan total pressure:

$$P_{vc} = P_v \left(\frac{D_c}{D}\right)^2 \left(\frac{N_c}{N}\right)^2 \left(\frac{\rho_c}{\rho}\right) \qquad \text{Eq. E.5}$$

E.3.6 Fan static pressure
By definition:

$$P_{sc} = P_{tc} - P_{vc} \qquad \text{Eq. E.6}$$

E.3.7 Fan static efficiency
By definition:

$$\eta_{sc} = \eta_{tc} \left(\frac{P_{sc}}{P_{tc}}\right) \qquad \text{Eq. E.7}$$

E.4 Fan laws for compressible flow

More general versions of the fan laws, which recognize the compressibility of air, can also be deduced from similarity considerations [20].

E.4.1 Fan total efficiency
Airflow conditions can never be completely similar, even for two completely similar fans, if the degree of compression varies. Nevertheless, it is useful and convenient to assume that the fan law equation for fan total efficiency (η_t) need not be modified.

$$\eta_{tc} = \eta_t \qquad \text{Eq. E.8}$$

E.4.2 Fan airflow rate
Continuity requires that the mass flow rate at the fan outlet equal that at the fan inlet. If the volumetric airflow rate at the inlet (Q_1) is proportional to peripheral speed, the volumetric airflow rate at the outlet (Q_2) cannot be proportional to peripheral speed or vice versa except for the same degree of compression. There is some average airflow rate that is proportional to peripheral speed and flow area. Since, for a polytropic process, the airflow rate is an exponential function of pressure, the geometric mean of the airflow rates at the inlet and outlet will be a very close approximation of the average airflow rate ($\overline{Q}$). The geometric mean is the square root of the product of the two end values:

$$\overline{Q} \approx \sqrt{Q_1 Q_2} \qquad \text{Eq. E.9}$$

The value ($\overline{Q}$) illustrated in the following diagram is the average airflow rate based on power output. This value yields the same power output as the polytropic process over the same range of pressures.

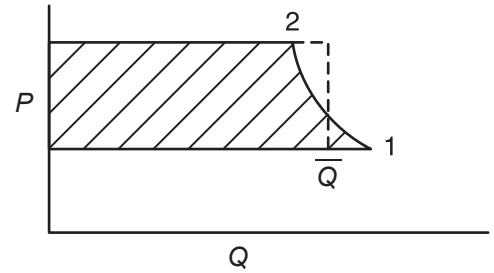

For the polytropic process:

$$H_o = Q_1 P_t K_p \qquad \text{Eq. E.10 SI}$$

$$H_o = \frac{Q_1 P_t K_p}{6343.3} \qquad \text{Eq. E.10 I-P}$$

For the rectangle:

$$H_o = \overline{Q} P_t \qquad \text{Eq. E.11 SI}$$

$$H_o = \frac{\overline{Q} P_t}{6343.3} \qquad \text{Eq. E.11 I-P}$$

Therefore:

$$\overline{Q} = Q_1 K_1 = Q K_p \qquad \text{Eq. E.12}$$

This average airflow rate can be substituted in Equation E.2 to give the compressible flow fan law equation for fan airflow rate:

$$Q_c = Q \left(\frac{D_c}{D}\right)^3 \left(\frac{N_c}{N}\right) \left(\frac{K_p}{K_{pc}}\right) \qquad \text{Eq. E.13}$$

E.4.3 Fan total pressure
The incompressible flow fan laws are based on a process that can be diagrammed as shown below.

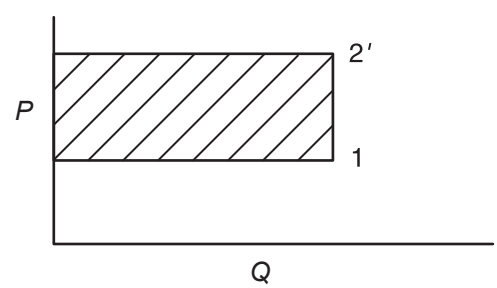

The fan output power is proportional to the shaded area, which leads to:

$$H_o = Q_1 (P_{2'} - P_1) \qquad \text{Eq. E.14 SI}$$

$$H_o = \frac{Q_1(P_{2'} - P_1)}{6343.3} \qquad \text{Eq. E.14 I-P}$$

Extending the definition of fan total pressure to the incompressible case:

$$P_{t'} = (P_{2'} - P_1) \qquad \text{Eq. E.15}$$

Therefore:

$$H_o = Q_1 P_{t'} \qquad \text{Eq. E.16 SI}$$

$$H_o = \frac{Q_1 P_{t'}}{6343.3} \qquad \text{Eq. E.16 I-P}$$

For the same airflow rate (Q_1), absolute inlet pressure (P_1) and power output (H_o), the corresponding equation for compressible flow is:

$$H_o = Q_1 P_t K_p \qquad \text{Eq. E.17 SI}$$

$$H_o = \frac{Q_1 P_t K_p}{6343.3} \qquad \text{Eq. E.17 I-P}$$

It follows that:

$$P_{t'} = P_t K_p \qquad \text{Eq. E.18}$$

The compressible flow fan law equation for fan total pressure can, therefore, be obtained by substitution:

$$P_{tc} = P_t \left(\frac{D_c}{D}\right)^2 \left(\frac{N_c}{N}\right)^2 \left(\frac{\rho_c}{\rho}\right)\left(\frac{K_p}{K_{pc}}\right) \qquad \text{Eq. E.19}$$

E.4.4 Fan input power

The equation for efficiency may be rearranged to give either:

$$H_i = \frac{Q P_t K_p}{\eta_t} \qquad \text{Eq. E.20 SI}$$

$$H_i = \frac{Q P_t K_p}{6343.3 \eta_t} \qquad \text{Eq. E.20 I-P}$$

Or:

$$H_{ic} = \frac{Q_c P_{tc} K_{pc}}{\eta_{tc}} \qquad \text{Eq. E.21 SI}$$

$$H_{ic} = \frac{Q_c P_{tc} K_{pc}}{6343.3 \eta_{tc}} \qquad \text{Eq. E.21 I-P}$$

Combining and using the compressible flow fan law relationships for fan airflow rate, fan total pressure, and fan total efficiency, it follows that the compressible flow fan law equation for fan input power is:

$$H_{ic} = H_i \left(\frac{D_c}{D}\right)^5 \left(\frac{N_c}{N}\right)^3 \left(\frac{\rho_c}{\rho}\right)\left(\frac{K_p}{K_{pc}}\right) \qquad \text{Eq. E.22}$$

E.4.5 Fan velocity pressure

By definition:

$$P_v = P_{v2} = \left(\frac{Q_2}{\sqrt{2} A_2}\right)^2 \rho_2 \qquad \text{Eq. E.23 SI}$$

$$P_v = P_{v2} = \left(\frac{Q_2}{1097.8 A_2}\right)^2 \rho_2 \qquad \text{Eq. E.23 I-P}$$

But from continuity:

$$\rho_2 Q_2 = \rho_1 Q_1 = \rho Q_1 \qquad \text{Eq. E.24}$$

Therefore:

$$P_v = \frac{\rho Q_1 Q_2}{\left(\sqrt{2} A_2\right)^2} \qquad \text{Eq. E.25 SI}$$

$$P_v = \frac{\rho Q_1 Q_2}{\left(1097.8 A_2\right)^2} \qquad \text{Eq. E.25 I-P}$$

But from Equations E.9 and E.12:

$$\overline{Q}^2 = Q^2 K_p{}^2 \approx Q_1 Q_2 \qquad \text{Eq. E.26}$$

It follows that:

$$P_v = \frac{\rho Q^2 K_p{}^2}{\left(\sqrt{2} A_2\right)^2} \qquad \text{Eq. E.27 SI}$$

$$P_v = \frac{\rho Q^2 K_p{}^2}{\left(1097.8 A_2\right)^2} \qquad \text{Eq. E.27 I-P}$$

By similar reasoning:

$$P_{vc} = \frac{\rho_c Q_c K_{pc}{}^2}{\left(\sqrt{2} A_{2c}\right)^2} \qquad \text{Eq. E.28 SI}$$

$$P_{vc} = \frac{\rho_c Q_c K_{pc}^{\ 2}}{\left(1097.8 A_{2c}\right)^2} \qquad \text{Eq. E.28 I-P}$$

By using the compressible flow fan law relationships for fan airflow rate and the proportionality of outlet area to diameter squared, it follows that the compressible flow fan law equation for fan velocity pressure is:

$$P_{vc} = P_v \left(\frac{D_c}{D}\right)^2 \left(\frac{N_c}{N}\right)^2 \left(\frac{\rho_c}{\rho}\right) \qquad \text{Eq. E.29}$$

E.4.6 Fan static pressure
By definition:

$$P_{sc} = P_{tc} - P_{vc} \qquad \text{Eq. E.30}$$

E.4.7 Fan static efficiency
By definition:

$$\eta_{sc} = \eta_{tc} \left(\frac{P_{sc}}{P_{tc}}\right) \qquad \text{Eq. E.31}$$

E.5 Fan law deviations

Among the requirements for complete similarity are those for equal force ratios that lead to Reynolds and Mach number considerations.

E.5.1 Reynolds number
There is some evidence that efficiency improves with an increase in Reynolds number. However, that evidence is not considered sufficiently documented enough to incorporate any rules in this annex. There is also some evidence that performance drops off with a significant decrease in Reynolds number [23]. The fan laws shall not be employed if it is suspected that the airflow regimes are significantly different because of a difference in Reynolds number.

E.5.2 Mach number
There is evidence that choking occurs when the Mach number at any point in the flow passages approaches unity. The fan laws shall not be employed if this condition is suspected.

E.5.3 Bearing and drive losses
While there may be other similarity laws covering bearings and other drive elements, the fan laws cannot be used to predict bearing or drive losses. The correct procedure is to subtract the losses for the first condition, make fan law projections of power input for the corrected first condition to the second condition and then add the bearing and drive losses for the second condition.

Annex F
Uncertainty Analysis [10] (Informative)

F.1 General

This analysis is based on the assumption that fan performance can be treated as a statistical quantity and that the performances derived from repeated tests would have a normal distribution. The best estimate of the true performance would therefore be the mean results based on repeated observations at each point of operation. Since only one set of observations is specified in the standard, this analysis must deal with the uncertainties in the results obtained from a single set of observations.

The results of a fan test are a complex combination of variables that must be presented graphically according to the standard. In order to simplify this analysis, test results will be considered to be the curves of fan static pressure versus fan airflow rate and fan static efficiency versus fan airflow rate. Analysis of fan input power is unnecessary since it is a part of efficiency analysis. The findings from a total pressure analysis would be similar to those of a static pressure analysis.

The uncertainty in the results will be expressed in two parts, both of which will be based on the uncertainties in various measurements. That part dealing with the pressure versus airflow rate curve will be called the characteristic uncertainty and that dealing with the efficiency versus airflow rate curve will be called the efficiency uncertainty. The characteristic uncertainty can be defined with reference to the following diagram:

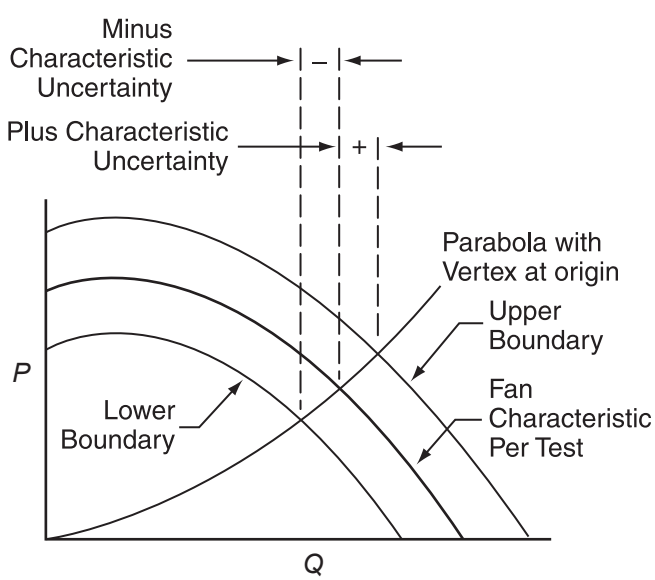

The diagram shows a plot of the fan static pressure versus fan airflow rate as determined by test per this standard. Surrounding this curve is a band of uncertainties, the boundaries of which are roughly parallel to the test curve. Also shown is a parabola with the vertex at the origin that intersects the fan curve and both of the boundaries. The characteristic uncertainty is defined as the difference in airflow rate between the intersection of the parabola with the test curve and the intersections of the parabola with the boundaries. Typically, the absolute characteristic uncertainty would be ± a certain number of m^3/s (cfm). The relative characteristic uncertainty would be the absolute characteristic uncertainty divided by the airflow rate at the intersection with the test curve.

The absolute efficiency uncertainty is defined as the difference in efficiency between that at points corresponding to the above mentioned intersections with the boundaries and that at the above mentioned intersection with the fan test curve. Typically, this would be expressed as ± so many percentage points. The relative efficiency uncertainty would be the absolute efficiency uncertainty divided by the efficiency at the point corresponding to the above mentioned intersection with the test curve.

The accuracies specified in the standard are based on two standard deviations. This means that there shall be a 95% probability that the uncertainty in any measurement will be less than the specified value. Since the characteristic uncertainty and the efficiency uncertainty are based on these measurements, there will be a 95% probability that these uncertainties will be less than the calculated value.

F.2 Symbols

In the analysis which follows, certain symbols and notations are used in addition to those that are used in the standard.

Symbol	Quantity
dP/dQ	Slope of fan characteristic
e_x	Per unit uncertainty in X
ΔX	Absolute uncertainty in X
F_x	Correlation factor for X

Subscript	Description
A	Area
b	Barometric pressure
C	Nozzle discharge coefficient
d	Dry-bulb temperature
f	Pressure for airflow rate
g	Pressure for fan pressure

H	Fan input power
K	Character
m	Maximum
N	Fan speed
o	Fan output power
P	Fan pressure
Q	Fan airflow rate
T	Torque
V	Variable as defined in Equation F.11
w	For wet-bulb depression, in tw
X	Generalized quantity (A, b, ...ρ)
η	Fan efficiency
ρ	Fan air density

F.3 Measurement uncertainties

The various measurement uncertainties which are permitted in the standard are listed below with some of the considerations that led to their adoption.

(1) Barometric pressure is easily measured within the ±170 Pa (±0.05 in. Hg) specified.

$$e_b = \frac{1.70}{p_b} \qquad \text{Eq. F.1 SI}$$

$$e_b = \frac{0.05}{p_b} \qquad \text{Eq. F.1 I-P}$$

(2) Dry-bulb temperature is easily measured within the ±1 °C (±2.0 °F) specified if there are no significant radiation sources.

$$e_d = \frac{1.0}{t_d + 273.15} \qquad \text{Eq. F.2 SI}$$

$$e_d = \frac{2.0}{t_d + 459.67} \qquad \text{Eq. F.2 I-P}$$

(3) Wet-bulb depression is easily measured within 3 °C (5.0 °F) if temperature measurements are within 1 °C (2.0 °F) and if air velocity is maintained in the specified range:

$$e_w = \frac{3}{t_d - t_w} \qquad \text{Eq. F.3 SI}$$

$$e_w = \frac{5}{t_d - t_w} \qquad \text{Eq. F.3 I-P}$$

(4) Fan speed requires careful measurement to hold the 0.5% tolerance specified.

$$e_N = 0.005 \qquad \text{Eq. F.4}$$

(5) Torque requires careful measurement to hold the 2.0% tolerance specified:

$$e_T = 0.02 \qquad \text{Eq. F.5}$$

(6) Nozzle discharge coefficients given in the standard have been obtained from ISO data and nozzles made to specifications shall perform within a tolerance of 1.2% according to that data.

A properly performed laboratory traverse is assumed to have equal accuracy:

$$e_c = 0.012 \qquad \text{Eq. F.6}$$

(7) The area at the flow measuring station will be within 0.5% when the diameter measurements are within the 0.2% specified:

$$e_A = 0.005 \qquad \text{Eq. F.7}$$

(8) The tolerance on the pressure measurement for determining flow rate is specified as 1% of the maximum reading during the test. This is easily obtained by using the specified calibration procedures. In addition, an allowance must be made for the mental averaging that is performed on fluctuating readings. This is estimated to be 1% of the reading. Using the subscript *m* to denote the condition for the maximum reading, a combined uncertainty can be written:

$$e_f = \sqrt{(0.01)^2 + \left[0.01\left(\frac{Q_m}{Q}\right)^2\right]^2} \qquad \text{Eq. F.8}$$

(9) The pressure measurement for determining fan pressure is also subject to an instrument tolerance of 1% of the maximum reading and an averaging tolerance of 1% of the reading. In addition, there are various uncertainties that are related to the velocity pressure. A tolerance of 10% of the fan velocity pressure shall cover the influence of yaw on pressure sensors, friction factor variances and other possible effects:

$$e_g = \sqrt{(0.01)^2 + \left[0.01\left(\frac{P_m}{P}\right)\right]^2 + \left[0.1\left(\frac{P_v}{P}\right)\right]^2} \qquad \text{Eq. F.9}$$

F.4 Combined uncertainties

The uncertainties in the test performance are the result of using various values, each of which is associated with an uncertainty. The combined uncertainty for each of the fan performance variables is given below. The characteristic uncertainty and the efficiency uncertainty are also given.

(1) Fan air density involves the various psychrometric measurements and the approximate formula:

$$\rho = \frac{p_b V}{R(t_d + 273.15)} \qquad \text{Eq. F.10 SI}$$

$$\rho = \frac{70.73 p_b V}{R(t_d + 459.67)} \qquad \text{Eq. F.10 I-P}$$

Where:

$$V = \left\{1.0 - 0.378\left[\frac{p_e}{p_b} - \frac{(t_d - t_w)}{1500}\right]\right\} \qquad \text{Eq. F.11 SI}$$

$$V = \left\{1.0 - 0.378\left[\frac{p_e}{p_b} - \frac{(t_d - t_w)}{2700}\right]\right\} \qquad \text{Eq. F.11 I-P}$$

For random and independent uncertainties in products, the combined uncertainty is determined as follows:

$$\frac{\Delta\rho}{\rho} = \sqrt{\left(\frac{\Delta 1.0}{1}\right)^2 + \left(\frac{\Delta p_b}{p_b}\right)^2 + \left(\frac{\Delta V}{V}\right)^2 + \left(\frac{\Delta R}{R}\right)^2 + \left(\frac{\Delta t_d}{T_d + 273.15}\right)^2} \qquad \text{Eq. F.12 SI}$$

$$\frac{\Delta\rho}{\rho} = \sqrt{\left(\frac{\Delta 70.73}{70.73}\right)^2 + \left(\frac{\Delta p_b}{p_b}\right)^2 + \left(\frac{\Delta V}{V}\right)^2 + \left(\frac{\Delta R}{R}\right)^2 + \left(\frac{\Delta t_d}{T_d + 459.67}\right)^2} \qquad \text{Eq. F.12 I-P}$$

Assuming $\Delta 70.73$ and ΔR are both zero:

$$e_\rho = \sqrt{e_b^2 + e_v^2 + e_d^2} \qquad \text{Eq. F.13}$$

It can be shown that:

$$e_V^2 = \left[(0.00002349 t_w - 0.0003204)\Delta(t_d - t_w)\right]^2 \qquad \text{Eq. F.14 SI}$$

$$e_V^2 = \left[(0.00000725 t_w - 0.0000542)\Delta(t_d - t_w)\right]^2 \qquad \text{Eq. F.14 I-P}$$

(2) Fan airflow rate directly involves the area at the airflow measuring station, the nozzle discharge coefficient, the square root of the pressure measurement for flow and the square root of the air density. When making fan law conversions, fan speed has a first power effect on airflow rate. The effects of uncertainties in each of these variables can be expressed mathematically as follows, where e_{QX} is the uncertainty in flow rate due to the uncertainty in X.

$$\begin{aligned} e_{QA} &= e_A & e_{QN} &= e_N \\ e_{QC} &= e_C & e_{Q\rho} &= \frac{e_\rho}{2} \\ e_{Qf} &= \frac{e_f}{2} & e_{QT} &= 0 \\ e_{Qg} &= 0 \end{aligned} \qquad \text{Eq. F.15}$$

The uncertainty in the airflow rate only can be determined from the above uncertainties by combining:

$$e_Q = \sqrt{e_c^2 + e_A^2 + \left(\frac{e_f}{2}\right)^2 + \left(\frac{e_\rho}{2}\right)^2 + e_N^2} \qquad \text{Eq. F.15A}$$

(3) Fan pressure directly involves the pressure measurement for fan pressure. In addition, when making fan law conversions, air density has a first power effect on fan pressure while fan speed produces a second power effect. Mathematically:

$$\begin{aligned} e_{PA} &= 0 & e_{PN} &= 2e_N \\ e_{PC} &= 0 & e_{P\rho} &= e_\rho \\ e_{Pf} &= 0 & e_{PT} &= 0 \\ e_{Pg} &= e_g \end{aligned} \qquad \text{Eq. F.16}$$

The uncertainty in the fan pressure only can be determined from the above uncertainties by combining:

$$e_P = \sqrt{e_g^2 + e_\rho^2 + (2e_N)^2} \qquad \text{Eq. F.16A}$$

(4) Fan input power directly involves the torque and speed measurements. In addition, when making fan law conversions, density has a first power effect and speed a third power effect on fan input power. The net effect with respect to speed is second power. Mathematically:

$$\begin{aligned} e_{HA} &= 0 & e_{HN} &= 2e_N \\ e_{HC} &= 0 & e_{H\rho} &= e_\rho \\ e_{Hf} &= 0 & e_{HT} &= e_T \\ e_{Hg} &= 0 \end{aligned} \qquad \text{Eq. F.17}$$

The uncertainty in the fan input power can only be determined from the above uncertainties by combining:

$$e_H = \sqrt{e_T^2 + e_\rho^2 + (2e_N)^2} \qquad \text{Eq. F.17A}$$

(5) The uncertainties in the measurements for fan flow rate and fan pressure create the characteristic uncertainty as defined in Section F.1. Assuming the uncertainties are small, the characteristic curves and parabola can be replaced by their tangents, and the effects of uncertainty in each measurement, (*X*), on the characteristic uncertainty can be determined. At a point (*Q*, *P*), the uncertainty in measurement (X) results in an uncertainty in *Q* and *P* of ΔQ_X and ΔP_X.

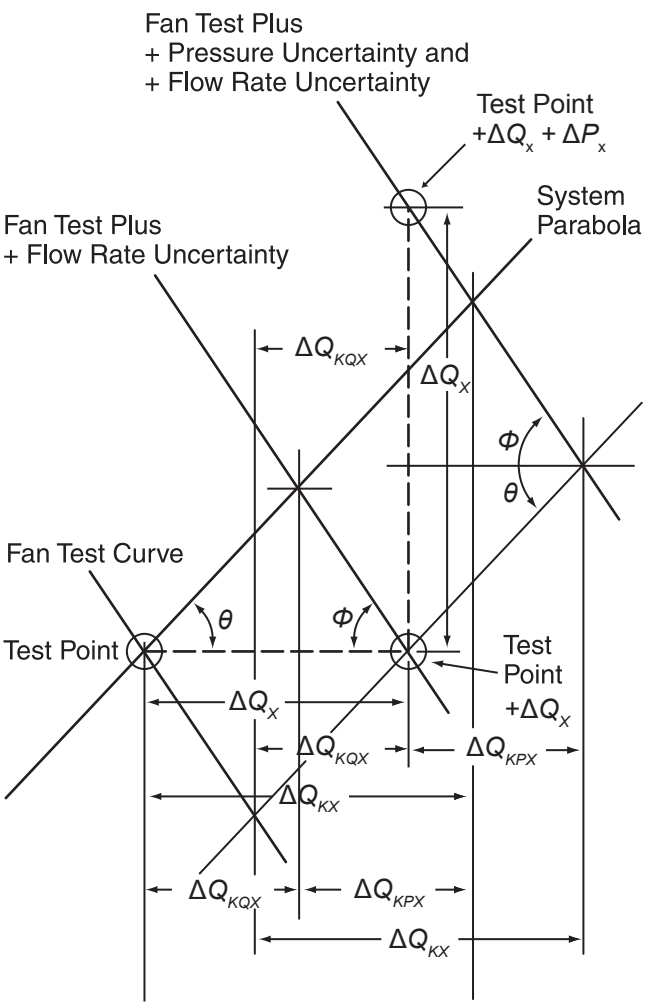

For ΔQ_X:

$$\Delta Q_{KQX}\tan\theta = (\Delta Q_x - \Delta Q_{KQX})\tan\phi \qquad \text{Eq. F.18}$$

$$\Delta Q_{KQX} = \Delta Q_x\left[\frac{\tan\phi}{\tan\theta + \tan\phi}\right] \qquad \text{Eq. F.19}$$

For ΔP_X:

$$\Delta Q_{KPX}\left(\tan\theta + \tan\phi\right) = \Delta P_x \qquad \text{Eq. F.20}$$

$$\Delta Q_{KPX} = \Delta P_x\left[\frac{1}{\tan\theta + \tan\phi}\right] \qquad \text{Eq. F.21}$$

Summing and simplifying by relating the tangents to the slopes of the parabola and the fan characteristic curve:

$$\Delta Q_{KX} = \Delta Q_{KQX} + \Delta Q_{KPX} \qquad \text{Eq. F.22}$$

$$\tan\phi = 2\left(\frac{P}{Q}\right) \qquad \text{Eq. F.23}$$

And:

$$\tan\phi = -\left(\frac{dP}{dQ}\right) \qquad \text{Eq. F.24}$$

$$\Delta Q_{KX} = \Delta Q_x\left[\frac{-\left(\frac{dp}{dQ}\right)}{2\left(\frac{P}{Q}\right) - \left(\frac{dP}{dQ}\right)}\right] + \Delta P_x\left[\frac{1}{2\left(\frac{P}{Q}\right) - \left(\frac{dP}{dQ}\right)}\right] \qquad \text{Eq. F.25}$$

$$e_{KX} = e_{QX}\left[\frac{-\left(\frac{dp}{dQ}\right)}{2\left(\frac{P}{Q}\right) - \left(\frac{dP}{dQ}\right)}\right] + \frac{e_{PPX}}{2}\left[\frac{2\left(\frac{P}{Q}\right)}{2\left(\frac{P}{Q}\right) - \left(\frac{dP}{dQ}\right)}\right] \qquad \text{Eq. F.26}$$

Introducing correlation factors:

$$F_Q = \left[\frac{-\left(\frac{dp}{dQ}\right)}{2\left(\frac{P}{Q}\right) - \left(\frac{dP}{dQ}\right)}\right] \qquad \text{Eq. F.27}$$

And:

$$F_P = \left[\frac{2\left(\frac{P}{Q}\right)}{2\left(\frac{P}{Q}\right) - \left(\frac{dP}{dQ}\right)}\right] \qquad \text{Eq. F.28}$$

$$e_{KX} = e_{QX}F_Q + \left(\frac{e_{PX}}{2}\right)F_P \qquad \text{Eq. F.29}$$

Combining Equations F.15, F.16 and F.29:

$$e_{KA} = e_A F_Q \qquad e_{Kg} = \left(\frac{e_g}{2}\right)F_P$$
$$e_{KC} = e_C F_Q \qquad e_{KN} = e_N\left(F_Q + F_P\right)$$
$$e_{Kf} = \left(\frac{e_f}{2}\right)F_Q \qquad e_{K\rho} = \frac{e_\rho}{2}\left(F_Q + F_P\right) \qquad \text{Eq. F.30}$$

Assuming these uncertainties are independent, they can be combined for the characteristic uncertainty as follows, noting that $F_Q + F_P = 1$:

$$e_K = \sqrt{\left(\frac{e_\rho}{2}\right)^2 + e_N{}^2 + F_P{}^2\left(\frac{e_g}{2}\right)^2 + F_Q{}^2\left[e_C{}^2 + e_A{}^2 + \left(\frac{e_f}{2}\right)^2\right]}$$

Eq. F.31

(6) Fan output power is proportional to the third power of airflow rate along a system characteristic. Therefore:

$$e_O = 3e_K$$ Eq. F.32

(7) Fan efficiency uncertainty was defined in Equation F.1. Using the above noted correlation factors and recombining the components:

$$e_\eta = \sqrt{\left(\frac{e_\rho}{2}\right)^2 + e_N{}^2 + e_T{}^2 + 9\left[F_P{}^2\left(\frac{e_g}{2}\right)^2 + F_Q{}^2\left(e_C{}^2 + e_A{}^2 + \left(\frac{e_f}{2}\right)^2\right)\right]}$$

Eq. F.33

F.5 Example

The characteristic test curve for a typical backward-curve centrifugal fan was normalized on the basis of shut-off pressure and free-delivery airflow rate. The resultant curve is shown in Figure F.1.

An uncertainty analysis based on this curve and the maximum allowable measurement tolerances follows:

(1) The maximum allowable measurement tolerances can be determined using the information from Section F.3. Where appropriate, lowest expected barometer and temperature for a laboratory at sea level are assumed.

Per unit uncertainties are:

$$e_b = \left[\frac{0.05}{28.5}\right] = 0.0018$$

$$e_d = \left[\frac{2.0}{(60 + 459.7)}\right] = 0.0038$$

$$e_W = \left[\frac{5.0}{(60 - 50)}\right] = 0.5$$

$e_N = 0.005$

$e_T = 0.02$

$e_C = 0.012$

$e_A = 0.005$

$$e_f = \sqrt{(0.01)^2 + \left[0.01\left(\frac{Q_m}{Q}\right)^2\right]^2}$$

And:

$$e_g = \sqrt{(0.01)^2 + \left[0.01\left(\frac{P_m}{P}\right)\right]^2 + \left[0.1\left(\frac{P_v}{P}\right)\right]^2}$$

Note that e_f and e_g vary with point of operation. In this example, the values of Q_m, Q, P_m and P are taken from Figure F.1. The velocity pressure at free delivery is taken to be 20% of the maximum static pressure.

(2) The various combined uncertainties and factors can be determined using the information from Section F.4. To illustrate, the per unit uncertainty in air density will be calculated:

$$e_p = \sqrt{e_b{}^2 + e_v{}^2 + e_d{}^2}$$

$$e_b{}^2 = \left(\frac{0.05}{28.5}\right)^2 = 0.00000308$$

$e_v{}^2 = [(0.00000725 \times 50 - 0.0000542)5.0]^2$

$= 0.00000238$

$$e_d{}^2 = \left[\frac{2.0}{(60 + 459.7)}\right]^2 = 0.00001481$$

And:

$e_r = 0.0045$

This is the expected accuracy for a laboratory at sea level. For extremes of altitude and wet-bulb temperatures, the limit is:

$e_r = 0.005$

(3) The characteristic uncertainty and the efficiency uncertainty can be calculated for various points of operation as indicated in Table F.1.

The values of Q, P and $-(dP/dQ)$ have been read directly from the normalized fan curve. The results have been plot-

ted as curves of per unit uncertainty versus airflow rate in Figure F.2.

F.6 Summary

The example is based on uncertainties that, in turn, are based on 95% confidence limits. Accordingly, the results of 95% of all tests will be better than indicated. Per unit uncertainties of one half those indicated will be achieved in 68% of all tests, while indicated per unit uncertainties will be exceeded in 5% of all tests. The examples from above provide the following conclusions:

(1) The characteristic uncertainty for the specified tolerances is about 1% near the best efficiency point and approaches 2% at free delivery. The uncertainty also increases rapidly as shutoff is approached.

(2) The fan efficiency uncertainty is about 3% near the best efficiency point and exceeds 5% at free delivery. The uncertainty increases rapidly near shutoff.

(3) Psychrometric measurement uncertainties have very little effect on overall accuracy. Calibration corrections are unnecessary in most cases.

(4) The nozzle discharge coefficient uncertainty has a very significant effect on overall accuracy. The 1.2% tolerance specified was based on the current state of the art. Any significant improvement in the accuracy of test results will depend on further work to reduce the uncertainty of this quantity.

(5) While the example was based on a typical characteristic for a backward-curve centrifugal fan, analyses of different characteristics for other fan types will yield sufficiently similar results that the same conclusion can be drawn.

(6) This analysis has been limited to a study of measurement uncertainties in laboratory setups. Other factors may have an equal or greater effect on fan performance. The results of an on-site test may deviate from predicted values because of additional uncertainties in measurements such as poor approach conditions to measuring stations. Deviations may also be due to conditions affecting the flow into or out of the fan which, in turn, affects the ability of the fan to perform. Differences in construction, which arise from manufacturing tolerances, may cause full-scale test performance to deviate from model performance.

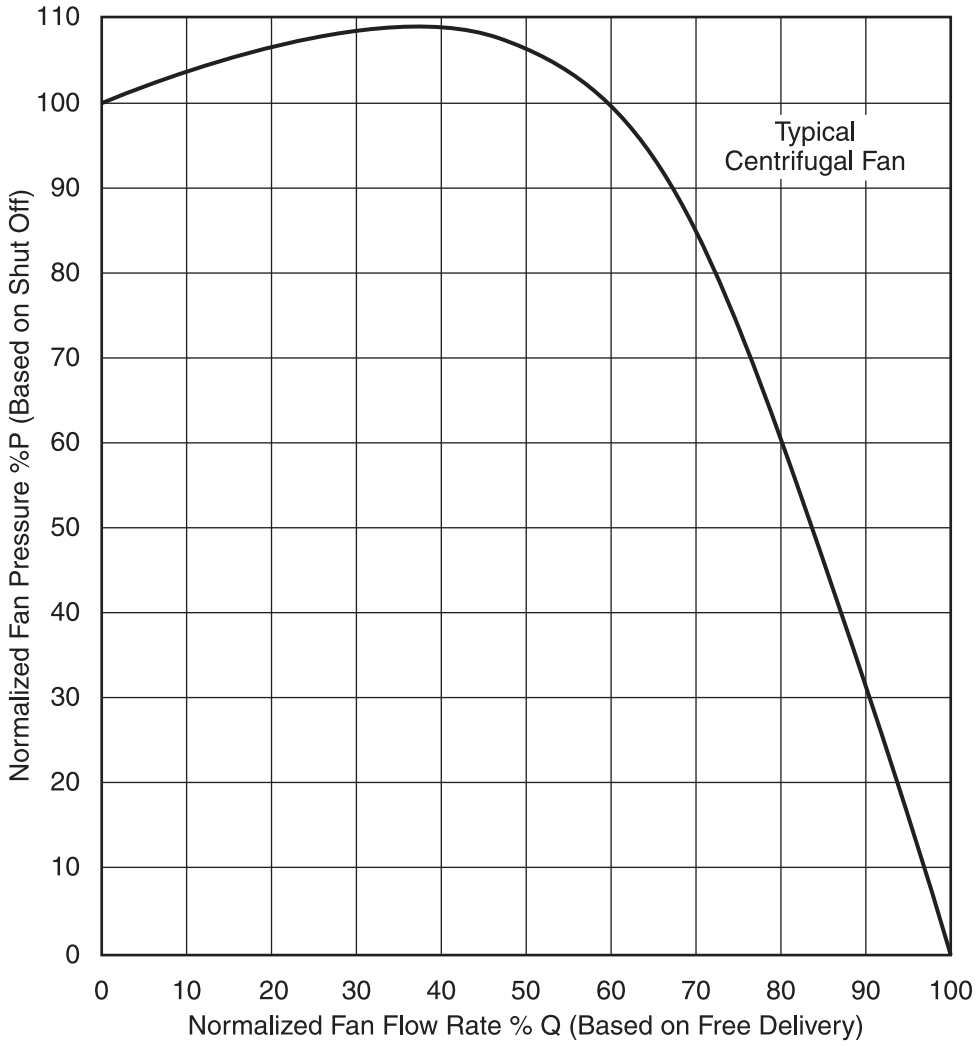

Figure F.1
Normalized Fan Flow vs. Pressure Curve

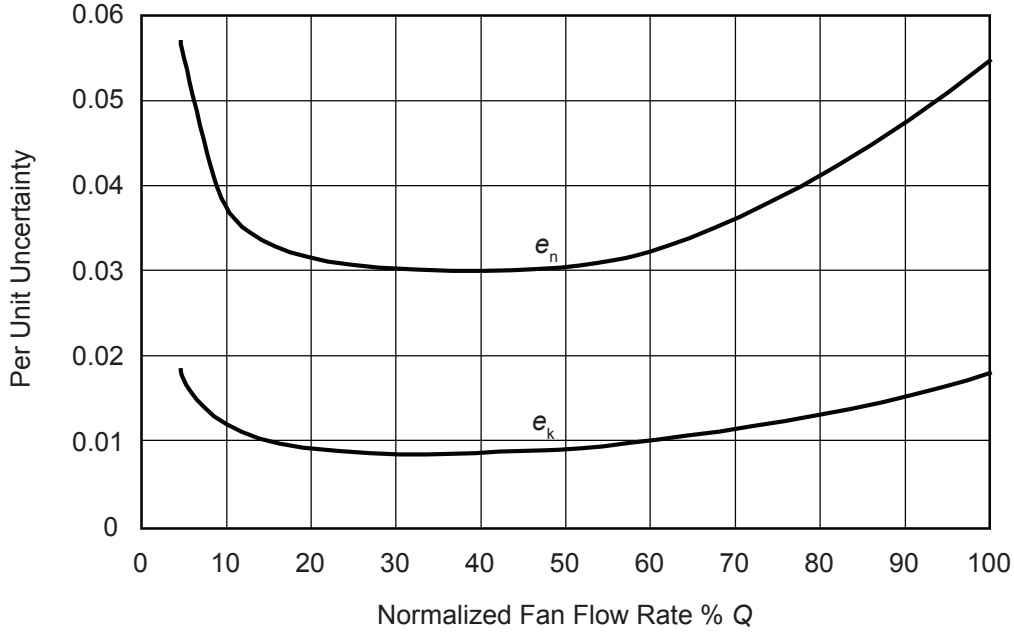

Figure F.2
Normalized Test Results Uncertainties

Table F.1
Tabulation for Uncertainty Analysis of Figure F.1

%Q	%P	$\left(\frac{dP}{dQ}\right)$	F_P	F_Q	$\left[\left(\frac{e_\rho}{2}\right)^2 + e_N^2\right]$	$\left[F_P^2\left(\frac{e_g}{2}\right)^2\right]$	$\left[F_Q^2\left(e_c^2 + e_A^2 + \frac{e_f^2}{4}\right)\right]$	e_K	e_0
99	3.2	3.215	0.01971	0.98029	31.2×10^{-6}	53.5×10^{-6}	211.4×10^{-6}	0.0172	0.0531
95	16	3.075	0.09873	0.90127	31.2×10^{-6}	47.5×10^{-6}	182.5×10^{-6}	0.0162	0.0500
90	31.5	2.900	0.19444	0.80556	31.2×10^{-6}	41.2×10^{-6}	150.6×10^{-6}	0.0149	0.0464
85	46	2.700	0.28616	0.71384	31.2×10^{-6}	36.8×10^{-6}	123.2×10^{-6}	0.0138	0.0433
80	59.5	2.500	0.37304	0.62696	31.2×10^{-6}	33.7×10^{-6}	100.2×10^{-6}	0.0129	0.0405
75	72	2.275	0.45769	0.54231	31.2×10^{-6}	31.9×10^{-6}	80.2×10^{-6}	0.0120	0.0379
70	82.7	1.950	0.54786	0.45214	31.2×10^{-6}	32.5×10^{-6}	60.9×10^{-6}	0.0112	0.0357
65	91.2	1.575	0.64051	0.35949	31.2×10^{-6}	34.9×10^{-6}	43.1×10^{-6}	0.0105	0.0337
60	98	1.150	0.73962	0.26038	31.2×10^{-6}	38.8×10^{-6}	26.2×10^{-6}	0.0098	0.0319
55	102.6	0.800	0.82343	0.17657	31.2×10^{-6}	42.6×10^{-6}	14.5×10^{-6}	0.0094	0.0307
50	105.3	0.500	0.89389	0.10611	31.2×10^{-6}	46.2×10^{-6}	6.6×10^{-6}	0.0092	0.0301
45	107	0.250	0.95006	0.04994	31.2×10^{-6}	49.3×10^{-6}	2.0×10^{-6}	0.0091	0.0299
40	107.9	0.050	0.99082	0.00918	31.2×10^{-6}	51.6×10^{-6}	0×10^{-6}	0.0091	0.0299
35	108	-0.025	1.00407	-0.00407	31.2×10^{-6}	51.9×10^{-6}	0×10^{-6}	0.0091	0.0300
30	107.6	-0.100	1.01414	-0.01414	31.2×10^{-6}	52.4×10^{-6}	0.6×10^{-6}	0.0092	0.0301
25	107	-0.175	1.02087	-0.02087	31.2×10^{-6}	53.0×10^{-6}	2.8×10^{-6}	0.0093	0.0306
20	106	-0.225	1.02169	-0.02169	31.2×10^{-6}	53.5×10^{-6}	7.4×10^{-6}	0.0096	0.0313
15	104.7	-0.275	1.02009	-0.02009	31.2×10^{-6}	53.7×10^{-6}	20.0×10^{-6}	0.0102	0.0331
10	103.2	-0.325	1.01600	-0.016	31.2×10^{-6}	54.0×10^{-6}	64.0×10^{-6}	0.0122	0.0386
5	101.6	-0.325	1.00806	-0.0086	31.2×10^{-6}	54.1×10^{-6}	259.8×10^{-6}	0.0186	0.0571

G.1 Calculating the value of C

To obtain the value of *C* to be used in calculating the chamber nozzle airflow rate in Section 7.3.1.6, an iteration process or, in some instances, an approximate process can be used.

G.2 Iterative procedure

A calculated value of Re is made using an estimated value of *C*. The calculated value of Re is then used to recalculate *C* until the difference between two successive trial values of *C* is ≤ 0.001, at which point the last trial value of *C* is taken as the value to be used in calculating chamber nozzle volume. In the following example, the first estimate of Re is made using an estimated value of *Ce* = 0.99. It is suggested that calculations be carried out to at least five decimal places.

G.3 Example iteration

Iteration 1

Step 1-1 — Calculate Re, using:

$$\mathrm{Re} = \frac{1097.8}{60\,\mu_6} Ce D_6 Y \sqrt{\frac{\Delta P \rho_5}{1 - E\beta^4}}$$

Where:

μ_6 = 1.222×10^{-5} lbm/ft•s
Ce = 0.99 (estimated)
D_6 = 6 in. = 0.5 ft
Y = 0.998 (calculate per Section 7.3.1.3)
ΔP = 1.005 in. wg
ρ = 0.0711 lbm/ft^3
$(1\text{-}E\,\beta^4)$ = 1 for iteration purposes

$$\mathrm{Re}_1 = \frac{1097.8}{(60)\left(1.222 \times 10^{-5}\right)}(0.99)(0.5)(0.998)\sqrt{(1.005)(0.0711)}$$

Re_1 = 197,397

Step 1-2
Calculate Ce_1, using Re_1 from the previous step, assuming that *L*/*D* = 0.6:

$$Ce_1 = 0.9986 - \frac{7.006}{\sqrt{(\mathrm{Re}_1)}} + \frac{134.6}{\mathrm{Re}_1}$$

$$Ce_1 = 0.9986 - \frac{7.006}{\sqrt{197{,}397}} + \frac{134.6}{197{,}397}$$

$$Ce_1 = 0.9831$$

Check: $|Ce - Ce_1| = |0.99 - 0.9831| = 0.0069$

Since 0.0069 > 0.001, a second iteration is required.

Iteration 2

Step 2-1 — Re-estimate Re, using Ce_1:

$$\mathrm{Re}_2 = \mathrm{Re}_1\left(\frac{Ce_1}{Ce}\right)$$

$$\mathrm{Re}_2 = 197{,}397\left(\frac{0.9831}{0.99}\right)$$

$$\mathrm{Re}_2 = 196{,}020$$

Step 2-2 — Recalculate C, using Re_2:

$$Ce_2 = 0.9986 - \frac{7.006}{\sqrt{\mathrm{Re}_2}} + \frac{134.6}{\mathrm{Re}_2}$$

$$Ce_2 = 0.9986 - \frac{7.006}{\sqrt{196{,}020}} + \frac{134.6}{196{,}020}$$

$$Ce_2 = 0.9835$$

Check: $|Ce_1 - Ce_2| = |0.9831 - 0.9835| = 0.0004$

Since 0.0004 < 0.001, no further iterations are required, and Ce_2 = 0.9835 = *C*.

If, for some unusual conditions, the iterations do not converge, then try a different starting initial guess for *Ce*.

G.4 Approximate procedure

For the range of temperature from 40°F to 100°F, a calculated value of Re can be obtained from:

$$\mathrm{Re} = 1{,}363{,}000 D_6 \sqrt{\frac{\Delta P \rho_x}{1 - \beta^4}}$$

The formula is based on *C* = 0.95, *Y* = 0.96, *E* = 1.0 and 1.222×10^{-5} lbm/ft-s.

Annex H
Fan Outlet Area (Normative)

H.1 General requirements

The fan area outlet can sometimes be difficult to define and measure. For certain test setups and installation types, the calculation of fan total pressure, P_t, is dependent on the value of the fan outlet area. This annex provides general requirements for determining where the fan outlet area is measured for various fan types. While an exhaustive description of each fan type is impractical, some examples and illustrations are provided. Fan outlet areas for other fan types can be found in ANSI/AMCA Standard 99.

H.2 Fans tested with outlet ducts — installation types B and D

For fans tested using installation types B and D, the fan outlet area is always planar and is perpendicular to the axis of the duct. While there may be localized turbulence, swirl or even a small amount of reverse flow at the discharge of the fan, the outlet test duct is intended to remove most of this and provide a nearly fully developed flow by the time the static pressure is measured, either in the duct or in an outlet chamber.

The fan outlet area used for the calculation of P_v and P_t is the gross cross-sectional area at the fan discharge. The equations for P_{t2} in the outlet chamber test figures are valid only when the outlet test duct has a uniform cross-sectional area equal to the fan outlet area.

H.2.1 Examples

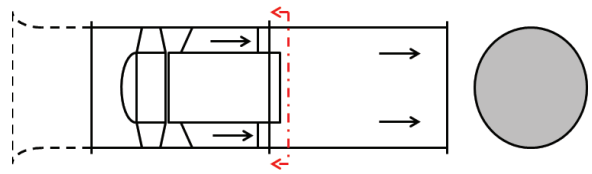

Fan outlet area for a ducted axial fan is the gross cross-sectional area at the fan outlet, which is also equal to the test duct cross-sectional area, regardless of whether the motor or inner shroud extends into the test duct.

Figure H.1
From Figure 15, Installation Type D: Ducted Inlet, Ducted Outlet

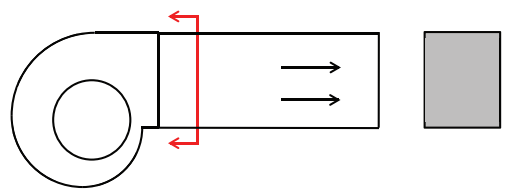

Fan outlet area for a centrifugal fan tested with an outlet duct is the gross cross-sectional area at the fan outlet, which is also equal to the test duct cross-sectional area, regardless of whether a cutoff plate is used to block a portion of the fan outlet.

Figure H.2
From Figure 12, Installation Type B: Free Inlet, Ducted Outlet

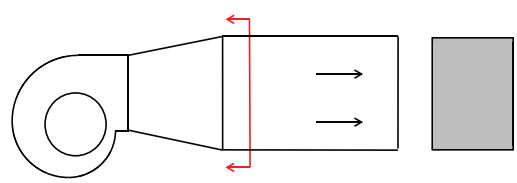

Fan outlet area for a fan tested with an outlet diffuser is the cross-sectional area at the diffuser outlet, which is also equal to the test duct cross-sectional area.

Figure H.3
From Figure 12, Installation Type B: Free Inlet, Ducted Outlet

H.3 Fans with a free discharge – installation types A and C

For fans tested with installation types A and C, the fan outlet area may either be planar or may be some other shape, depending on the fan type. For example, if the fan outlet is radial, the fan outlet area will be determined at the perimeter of the fan. The fan outlet area must be adjacent to the location where the fan discharge static pressure is measured (or assumed zero in the lab), with no additional area changes taking place between these locations.

H.3.1 Examples

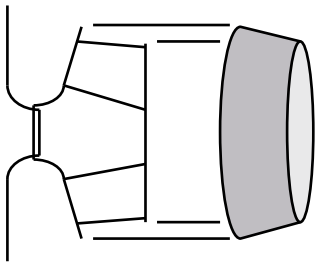

Fan outlet area for an unhoused centrifugal fan is the area at the perimeter of the fan wheel between the wheel back and shroud.

Figure H.4
From Figure 15, Installation Type A: Free Inlet, Free Outlet

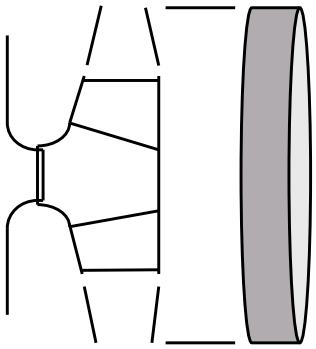

Fan outlet area for an unhoused centrifugal fan with a stationary diffuser is the area at the discharge of the diffuser.

Figure H.5
From Figure 15, Installation Type A: Free Inlet, Free Outlet

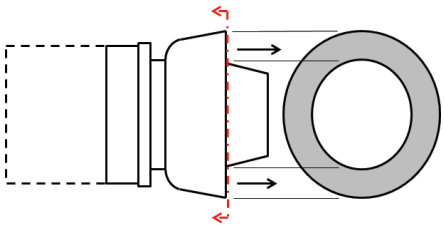

Figure H.6
From Figure 12, Installation Type C: Ducted Inlet, Free Outlet
Fan outlet area for a centrifugal powered roof ventilator is the net cross-sectional area where the airflow leaves the fan housing.

Annex I
General References/Bibliography (Informative)

[1] Page, C. H., and P. Vigoureux. NBS Special Publication 330. The International System of Units (SI). Washington: National Bureau of Standards (now National Institute for Standards and Technology), 1972. — AMCA #1140

[2] ibid, p 19. — AMCA #1140

[3] ASHRAE Standard 41.5-75. Standard Measurement Guide, Engineering Analysis of Experimental Data. Atlanta: ASHRAE, 1975. — AMCA #1142

[4] ISO/TC 30/WG 8 (Secr. 7) 13E. Draft Proposal for an ISO Recommendation on Fluid Flow Measurement in Closed Conduits by Means of Pitot Tubes. Geneva: ISO, 1969— AMCA #2313

[5] Folsom, R. G. Review of the Pitot Tube, I-P-142. Ann Arbor, MI: University of Michigan, 1955. — AMCA #1144

[6] Bohanon, H. R. Air Flow Measurement Velocities. Memorandum Report to AMCA 210/ASHRAE 51P Committee, April 18, 1973. Arlington Heights, IL: AMCA, 1973. — AMCA #1146

[7] Winternitz, F. A. L., and C. F. Fischl. A Simplified Integration Technique for Pipe-Flow Measurement. Water Power, vol. 9, no. 6 (June 1957): 225-234. — AMCA #1147

[8] Brown, N. A Mathematical Evaluation of Pitot Tube Traverse Methods. ASHRAE Technical Paper No. 2335. Atlanta: ASHRAE, 1975. — AMCA #1003

[9] Bohanon, H. R. Fan Test Chamber-Nozzle Coefficients. ASHRAE Technical Paper No. 2334. Atlanta: ASHRAE, 1975. — AMCA #1038

[10] Bohanon, H. R., Laboratory Fan Test: Error Analysis, ASHRAE Technical Paper No. 2332. Atlanta: ASHRAE, 1975.— AMCA #1034

[11] IEEE Standard 112-1984 (R1996). Standard Test Procedure for Polyphase Induction Motors and Generators. New York: IEEE, 1996. — AMCA #1149

[12] ASHRAE Standard 41.1-86 (RA91). Standard Measurements Guide. Section 6.12. Atlanta: ASHRAE, 1986. — AMCA #1168

[13] BS 848: Part 1: 1980. Fans for General Purposes. Part 1. Methods of Testing Performance. London: British Standards Institute, 1980.

[14] Bean, P. G., E. Hay, and J. Whitaker. Measurement of Losses Across Multi-cell Flow Straighteners. NEL Report No. 461, July, 1970. Glasgow: National Engineering Laboratory, 1970. — AMCA #1153

[15] ISO/TC 117 SC1/WG 1 (Denmark-4) 46E. 1971 Report on Measurements Made on the Downstream Side of a Fan with Duct Connection. International Organization for Standardization. Geneva: ISO, 1971. — AMCA #1152

[16] Burkhardt, K. W., and A. C. Potter. Test Chambers for Fans. Results of Tests Conducted by AMCA 210/ASHRAE 51 Committee. Arlington Heights, IL: AMCA, 1975. — AMCA #1154

[17] Helander, L. Psychrometric Equations for the Partial Vapor Pressure and the Density of Moist Air. Report to AMCA 210/ASHRAE 51P Committee, November 1, 1974. Arlington Heights, IL: AMCA, 1974. — AMCA #1156

[18] Helander, L. Viscosity of Air. Memorandum Report to AMCA 210/ASHRAE 51P Committee, January 11. 1973. Arlington Heights, IL: AMCA, 1973. —AMCA #1158

[19] ISO/TC 117/SC 1/WG 2 (U.K.-8)78. Friction Factors for Standardized Airways. Geneva: ISO,1973. — AMCA #1159

[20] Bohanon, H. R., and R. Jorgensen. Compressibility and Fan Laws. ASHRAE Technical Paper No. 2333. Atlanta: ASHRAE, 1975 — AMCA #1035

[21] ISO 5801. 1st ed. 1997-06-01, Industrial Fans – Performance Testing Using Standardized Airways. Geneva: ISO, 1997.

[22] Jorgensen, R. Fan Engineering. Chapter 12. Buffalo, NY: Buffalo Forge Company, 1983.

OTHER:

ASHRAE Handbook of Fundamentals. Table 2: Thermodynamic Properties of Moist Air. Chapter 6. Atlanta: ASHRAE, 1993.

ASME Steam Tables. p 283. New York: ASME, 1967. — AMCA #2312

ASME PTC 10-1974 (R1986). Performance Test Code for Compressors and Exhausters. New York: ASME, 1986. — AMCA #1074

ASME PTC 19.2-1987. Instruments and Apparatus, Pressure Measurement. New York: ASME, 1987. — AMCA #2093

ASTM E 380-93. Metric Practice Guide. Philadelphia: American Society for Testing Materials, 1993. — AMCA #1160

Bohanon, H. R., and R. Jorgensen. Momentum Effect Calculations for Fan Outlet Ducts. AMCA Engineering Conference Paper, May 1990. Arlington Heights, IL: AMCA, 1990. — AMCA #2109

ISO/TC 117/SC 1/WG 2 (U.K. 4). 1969 Supplementary Notes on Pressure Tappings. Geneva: ISO, 1969. — AMCA #1145

ISO 5167-1:1991(E). Measurement of Fluid Flow by Pressure Differential Devices. Pt. 1: Orifice Plates, Nozzles and Venturi Tubes Inserted in Circular Cross Section Conduits Running Full. Geneva: ISO, 1991.

ISO 5168:1978(E). Measurement of Fluid Flow. Estimation of Uncertainty of a Flow Rate Measurement. Geneva: ISO, 1978.

ISO/R 541-1967(E). Measurement of Fluid Flow by Means of Orifice Plates and Nozzles. (Withdrawn. See ISO 5167). Geneva: ISO, 1967. — AMCA #1162

Nixon, R. A. Examination of the Problem of Pump Scale Laws. Paper 2D-1. Glasgow: National Engineering Laboratory, 1967. — AMCA #1161

RESOURCES

AMCA Membership Information
http://www.amca.org/members/members.php

AMCA International Headquarters and Laboratory
www.amca.org

AMCA White Papers
www.amca.org/whitepapers

Searchable CRP Database of AMCA Certified Products
www.amca.org/certified-listed/cpsearch.php

VISIT THE AMCA STORE

AMCA International provides its publications and standards through the AMCA Store online at www.amca.org/store. The AMCA Store is powered by Techstreet, a division of Thomson Reuters. Accessing documents from the AMCA Store requires users to establish or log into their existing Techstreet account.

All documents are available as print-on-demand hardcopy for a handling fee and shipping costs. Electronic files are made available as PDF for immediate download. Many publications and standards have options for a redline version (indicating changes from previous version); multiuser license for PDF files, and a "PDF plus print" that provides an electronic file and a hardcopy at a reduced cost.

AMCA members can access a 50% discount on all publications by logging into www.amca.org/MyAMCA before logging into Techstreet. A user guide for the AMCA Store is available at www.amca.org/store.

Air Movement and Control Association International

AMCA Corporate Headquarters
30 W. University Drive, Arlington Heights, IL 60004-1893, USA
communications@amca.org · Ph: +1-847-394-0150 · www.amca.org

The Air Movement and Control Association International Inc. is a not-for-profit association of the world's manufacturers of air system equipment, such as fans, louvers, dampers, air curtains, airflow measurement stations, acoustic attenuators and other air system components for the industrial and commercial markets.