INTERNATIONAL STANDARD

ISO 13253

Third edition
2017-07

Ducted air-conditioners and air-to-air heat pumps — Testing and rating for performance

Climatiseurs et pompes à chaleur air/air raccordés — Essais et détermination des caractéristiques de performance

Reference number
ISO 13253:2017(E)

© ISO 2017

COPYRIGHT PROTECTED DOCUMENT

© ISO 2017, Published in Switzerland

All rights reserved. Unless otherwise specified, no part of this publication may be reproduced or utilized otherwise in any form or by any means, electronic or mechanical, including photocopying, or posting on the internet or an intranet, without prior written permission. Permission can be requested from either ISO at the address below or ISO's member body in the country of the requester.

ISO copyright office
Ch. de Blandonnet 8 • CP 401
CH-1214 Vernier, Geneva, Switzerland
Tel. +41 22 749 01 11
Fax +41 22 749 09 47
copyright@iso.org
www.iso.org

Contents

Page

Foreword ... **vi**

1 Scope ... **1**

2 Normative references ... **1**

3 Terms and definitions ... **2**

4 Symbols ... **4**

5 Airflow setting ... **7**
5.1 General ... 7
5.2 Indoor airflow setting ... 7
5.3 ESP for rating ... 7
5.4 Outdoor airflow ... 9
5.5 Unit supplied without indoor fan ... 9

6 Cooling tests ... **9**
6.1 Cooling capacity tests ... 9
6.1.1 General conditions ... 9
6.1.2 Temperature conditions ... 10
6.1.3 Test conditions ... 11
6.2 Maximum cooling performance test ... 11
6.2.1 General conditions ... 11
6.2.2 Temperature conditions ... 11
6.2.3 Airflow conditions ... 12
6.2.4 Test conditions ... 12
6.2.5 Performance requirements ... 12
6.3 Minimum cooling performance test ... 13
6.3.1 General conditions ... 13
6.3.2 Temperature conditions ... 13
6.3.3 Airflow conditions ... 13
6.3.4 Test conditions ... 14
6.3.5 Performance requirements ... 14
6.4 Condensate control and enclosure sweat performance test ... 15
6.4.1 General conditions ... 15
6.4.2 Temperature conditions ... 15
6.4.3 Airflow conditions ... 15
6.4.4 Test conditions ... 15
6.4.5 Performance requirements ... 15

7 Heating tests ... **16**
7.1 Heating capacity tests ... 16
7.1.1 General conditions ... 16
7.1.2 Temperature conditions ... 17
7.1.3 Airflow conditions ... 17
7.1.4 Defrost operation ... 18
7.1.5 Test procedure — General ... 18
7.1.6 Preconditioning period ... 19
7.1.7 Equilibrium period ... 19
7.1.8 Data collection period ... 19
7.1.9 Test procedure when a defrost cycle (whether automatically or manually initiated) ends the preconditioning period ... 20
7.1.10 Test procedure when a defrost cycle does not end the preconditioning period ... 20
7.1.11 Test procedure for transient tests ... 20
7.1.12 Heating capacity test results ... 22
7.2 Maximum heating performance test ... 22
7.2.1 General conditions ... 22
7.2.2 Temperature conditions ... 22

© ISO 2017 – All rights reserved

7.2.3 Airflow conditions 22
7.2.4 Test conditions 23
7.2.5 Performance requirements 23
7.3 Minimum heating performance test 23
7.3.1 General conditions 23
7.3.2 Temperature conditions 23
7.3.3 Airflow conditions 23
7.3.4 Test conditions 23
7.3.5 Performance requirements 24
7.4 Automatic defrost performance test 24
7.4.1 General conditions 24
7.4.2 Temperature conditions 24
7.4.3 Airflow conditions 24
7.4.4 Test conditions 24
7.4.5 Performance requirements 25

8 Test methods and uncertainties of measurement 25
8.1 Test methods 25
8.1.1 General 25
8.1.2 Calorimeter test method 25
8.1.3 Indoor air enthalpy method 25
8.1.4 Capacity tests 26
8.2 Uncertainty of measurement 26
8.3 Test tolerances for steady-state cooling and heating capacity tests 27
8.4 Test tolerances for performance tests 28

9 Test results 28
9.1 Capacity results 28
9.1.1 General 28
9.1.2 Adjustments 29
9.1.3 Cooling capacity calculations 29
9.1.4 Heating capacity calculations 29
9.2 Data to be recorded 30
9.3 Test report 33
9.3.1 General information 33
9.3.2 Capacity test results 33
9.3.3 Performance tests 33

10 Marking provisions 34
10.1 Nameplate requirements 34
10.2 Nameplate information 34
10.3 Split systems 34

11 Publication of ratings 34
11.1 Standard ratings 34
11.2 Other ratings 35

Annex A (normative) **Airflow settings for ducted units 36**

Annex B (normative) **Test requirements 41**

Annex C (informative) **Airflow measurement 48**

Annex D (normative) **Calorimeter test method 54**

Annex E (normative) **Indoor air enthalpy test method 62**

Annex F (informative) **Refrigerant enthalpy test method 68**

Annex G (informative) **Outdoor air enthalpy test method 70**

Annex H (informative) **Indoor calorimeter confirmative test method 73**

Annex I (informative) **Outdoor calorimeter confirmative test method 75**

 © ISO 2017 – All rights reserved

Annex J (informative) **Balanced-type calorimeter confirmative test method** **77**
Annex K (informative) **Cooling condensate measurements** **78**
Annex L (normative) **Supplemental requirements when rating fan-less (coil-only) type units** **79**
Annex M (informative) **Pictorial examples of the heating capacity test procedures given in 7.1** **82**
Bibliography **89**

© ISO 2017 – All rights reserved

Foreword

ISO (the International Organization for Standardization) is a worldwide federation of national standards bodies (ISO member bodies). The work of preparing International Standards is normally carried out through ISO technical committees. Each member body interested in a subject for which a technical committee has been established has the right to be represented on that committee. International organizations, governmental and non-governmental, in liaison with ISO, also take part in the work. ISO collaborates closely with the International Electrotechnical Commission (IEC) on all matters of electrotechnical standardization.

The procedures used to develop this document and those intended for its further maintenance are described in the ISO/IEC Directives, Part 1. In particular the different approval criteria needed for the different types of ISO documents should be noted. This document was drafted in accordance with the editorial rules of the ISO/IEC Directives, Part 2 (see www.iso.org/directives).

Attention is drawn to the possibility that some of the elements of this document may be the subject of patent rights. ISO shall not be held responsible for identifying any or all such patent rights. Details of any patent rights identified during the development of the document will be in the Introduction and/or on the ISO list of patent declarations received (see www.iso.org/patents).

Any trade name used in this document is information given for the convenience of users and does not constitute an endorsement.

For an explanation on the meaning of ISO specific terms and expressions related to conformity assessment, as well as information about ISO's adherence to the World Trade Organization (WTO) principles in the Technical Barriers to Trade (TBT) see the following URL: www.iso.org/iso/foreword.html.

This document was prepared by Technical Committee ISO/TC 86, *Refrigeration and air-conditioning*, Subcommittee SC 6, *Testing and rating of air-conditioners and heat pumps*.

This third edition cancels and replaces the second edition (ISO 13253:2011), which has been technically revised.

© ISO 2017 – All rights reserved

Ducted air-conditioners and air-to-air heat pumps — Testing and rating for performance

1 Scope

This document specifies performance testing, the standard conditions and the test methods for determining the capacity and efficiency ratings of air-cooled, air-conditioners and air-to-air heat pumps.

This document is applicable to the following equipment:

— ducted air-cooled air conditioners and ducted air to air heat pumps.

This document is limited to

— residential, commercial and industrial single-package, and split-system air conditioners and heat pumps,

— factory-made, electrically driven and use mechanical compression,

— utilizing single, multiple and variable capacity components, and

— multiple split-system utilizing one or more refrigeration systems, one outdoor unit and one or more indoor units, controlled by a single thermostat/controller.

The requirements of testing and rating contained in this document are based on the use of matched assemblies.

This document is not applicable to the rating and testing of the following:

a) water-source heat pumps or water-cooled air-conditioners;

b) multi-split-system air-conditioners and air-to-air heat pumps (see ISO 15042 for testing of such equipment);

c) mobile (windowless) units having a condenser exhaust duct;

d) individual assemblies not constituting a complete refrigeration system;

e) equipment using the absorption refrigeration cycle;

f) non-ducted equipment (see ISO 5151 for testing of such equipment);

g) ducted air conditioners and/or ducted heat pumps, rated at less than 8 kW and intended to operate at external static pressures of less than 25 Pa, controlled by a single thermostat/controller (refer to ISO 5151).

This document does not cover the determination of seasonal efficiencies, which can be required in some countries because they provide a better indication of efficiency under actual operating conditions.

NOTE Throughout this document, the terms “equipment” and “systems” mean “air-conditioners” and/or “heat pumps”.

2 Normative references

The following documents are referred to in the text in such a way that some or all of their content constitutes requirements of this document. For dated references, only the edition cited applies. For undated references, the latest edition of the referenced document (including any amendments) applies.

© ISO 2017 – All rights reserved

ISO/IEC Guide 98-3, *Uncertainty of measurement — Part 3: Guide to the expression of uncertainty in measurement (GUM:1995)*

ISO 817, *Refrigerants — Designation and safety classification*

ISO 5151, *Non-ducted air conditioners and heat pumps — Testing and rating for performance*

3 Terms and definitions

For the purposes of this document, the following terms and definitions apply.

ISO and IEC maintain terminological databases for use in standardization at the following addresses:

— IEC Electropedia: available at http://www.electropedia.org/

— ISO Online browsing platform: available at http://www.iso.org/obp

3.1
ducted air-conditioner
encased assembly or assemblies designed primarily to provide ducted delivery of conditioned air to an enclosed space, room or zone (conditioned space)

Note 1 to entry: It can be either single-package or split-system and comprises a primary source of refrigeration for cooling and dehumidification. It can also include means for heating other than a heat pump, as well as means for circulating, cleaning, humidifying, ventilating or exhausting air. Such equipment can be provided in more than one assembly; the separated assemblies (split-systems) of which are intended to be used together.

3.2
ducted heat pump
encased assembly or assemblies designed primarily to provide ducted delivery of conditioned air to an enclosed space, room or zone (conditioned space), including a prime source of refrigeration for heating

Note 1 to entry: It can be constructed to remove heat from the conditioned space and discharge it to a heat sink if cooling and dehumidification are desired from the same equipment. It can also include means for circulating, cleaning, humidifying, ventilating or exhausting air. Such equipment can be provided in more than one assembly; the separated assemblies (split-systems) of which are intended to be used together.

3.3
standard air
dry air at 20,0 °C and at a standard barometric pressure of 101,325 kPa, having a mass density of 1 204 kg/m^3

3.4
total cooling capacity
amount of sensible and latent heat that the equipment can remove from the conditioned space in a defined interval of time

Note 1 to entry: Total cooling capacity is expressed in units of watts.

3.5
heating capacity
amount of heat that the equipment can add to the conditioned space (but not including supplementary heat) in a defined interval of time

Note 1 to entry: Heating capacity is expressed in units of watts.

© ISO 2017 – All rights reserved

3.6
latent cooling capacity
room dehumidifying capacity
amount of latent heat that the equipment can remove from the conditioned space in a defined interval of time

Note 1 to entry: Latent cooling capacity and room dehumidifying capacity are expressed in units of watts.

3.7
sensible cooling capacity
amount of sensible heat that the equipment can remove from the conditioned space in a defined interval of time

Note 1 to entry: Sensible cooling capacity is expressed in units of watts.

3.8
sensible heat ratio
SHR
ratio of the *sensible cooling capacity* (3.7) to the *total cooling capacity* (3.4)

3.9
rated voltage
voltage shown on the nameplate of the equipment

3.10
rated frequency
frequency shown on the nameplate of the equipment

3.11
energy efficiency ratio
EER
ratio of the *total cooling capacity* (3.4) to the *effective power input* (3.14) to the device at any given set of rating conditions

Note 1 to entry: Where the EER is stated without an indication of units, it is understood that it is derived from watts/watts.

3.12
coefficient of performance
COP
ratio of the *heating capacity* (3.5) to the *effective power input* (3.14) to the device at any given set of rating conditions

Note 1 to entry: Where the COP is stated without an indication of units, it is understood that it is derived from watts/watts.

3.13
total power input
P_t
average electrical power input to the equipment as measured during the test

Note 1 to entry: Total power input is expressed in units of watts.

3.14
effective power input
P_E
average electrical power input to the equipment, obtained from the following:

— the power input for operation of the compressor(s);

— the power input to electric heating devices used only for defrosting;

© ISO 2017 – All rights reserved

— the power input to all control and safety devices of the equipment;

— the power input for operation of all fans, whether provided with the equipment or not

Note 1 to entry: Effective power input is expressed in units of watts.

3.15
full-load operation
operation with the equipment and controls configured for the maximum continuous duty refrigeration capacity specified by the manufacturer and allowed by the unit controls

Note 1 to entry: Unless otherwise regulated by the automatic controls of the equipment, all indoor units and compressors are functioning during full-load operations.

4 Symbols

Symbol	Description	Unit
A_l	coefficient, heat leakage	J/(s·K)
A_n	nozzle area	m^2
c_{pa1}	specific heat of moist air entering indoor-side[b]	J/(kg[b]·K)
c_{pa2}	specific heat of moist air leaving indoor-side[b]	J/(kg[b]·K)
c_{pa3}	specific heat of moist air entering outdoor-side[b]	J/(kg[b]·K)
c_{pa4}	specific heat of moist air leaving outdoor-side[b]	J/(kg[b]·K)
c_{pw}	specific heat of water	J/(kg[b]·K)
C	airflow coefficient	$Pa/(m^3/s)^2$
C_d	nozzle discharge coefficient	—[a]
D_e	equivalent diameter	M
D_i	diameter of circular ducts, inlet	m
D_n	nozzle throat diameter	m
D_o	diameter of circular ducts, outlet	m
D_t	outside diameter of refrigerant tube	m
h_{a1}	specific enthalpy of air entering the indoor-side	J/kg[b]
h_{a2}	specific enthalpy of air leaving the indoor-side	J/kg[b]
h_{a3}	specific enthalpy of air entering the outdoor-side	J/kg[b]
h_{a4}	specific enthalpy of air leaving the outdoor-side	J/kg[b]
h_{f1}	specific enthalpy of refrigerant liquid entering expansion device	J/kg
h_{f2}	specific enthalpy of refrigerant liquid leaving condenser	J/kg
h_{g1}	specific enthalpy of refrigerant vapour entering compressor	J/kg
h_{g2}	specific enthalpy of refrigerant vapour leaving compressor	J/kg
h_{r1}	specific enthalpy of refrigerant entering the indoor-side	J/kg
h_{r2}	specific enthalpy of refrigerant leaving the indoor-side	J/kg
h_{w1}	specific enthalpy of water or steam supplied to the indoor side test chamber	J/kg
h_{w2}	specific enthalpy of condensed moisture leaving the indoor side test chamber	J/kg
h_{w3}	specific enthalpy of condensed moisture leaving outdoor-side test chamber	J/kg
h_{w4}	specific enthalpy of the water supplied to the outdoor side test chamber	J/kg

[a] Dimensionless value.

[b] It means the mass of dry air; the mass, kg of denominator in this unit is based on dry air (or DA). For units practically used in the air conditioning field, "kg (DA)" is very often used for denominator.

Example: J/kg(DA), m^3/kg(DA), kg/kg(DA).

NOTE All parameters are in relation to the unit being tested unless specified otherwise.

 © ISO 2017 – All rights reserved

Symbol	Description	Unit
h_{w5}	specific enthalpy of the condensed water (in the case of H1 test condition) and the frost, respectively (in the case of H2 or H3 test conditions) in the test unit	J/kg
K_1	latent heat of vaporization of water (2 460 × 10^3 J/kg at 15 °C)	J/kg
L	length of refrigerant line	m
L_d	length of duct	m
L_m	length to external static pressure measuring point	m
p_a	barometric pressure	kPa
p_c	test chamber equalization pressure	Pa
p_e	external static pressure (ESP)	Pa
p_{isc}	internal static pressure drop of the indoor coil cabinet assembly measured from the cooling capacity test	Pa
p_m	external static pressure (p_e during the blowing test)	Pa
p_n	absolute pressure at nozzle throat	Pa
p_v	velocity pressure at nozzle throat or static pressure difference across the nozzle	Pa
P_{fan}	estimated fan power to circulate indoor air	W
P_i	power input, indoor-side data	W
P_K	power input to the compressor	W
P_t	total power input to the equipment	W
q_m	air mass flow rate	kg/s
q_r	refrigerant flow rate	kg/s
q_{ro}	refrigerant and oil mixture flow rate	kg/s
q_v	air volume flow rate	m^3/s
q_{vi}	air volume flow rate, outdoor-side	m^3/s
q_{vo}	air volume flow rate, outdoor-side	m^3/s
q_w	condenser water flow rate	kg/s
q_{wc}	rate at which water vapour is condensed by the equipment	kg/s
q_{wo}	water mass flow supplied to the outside test chamber for maintaining the test conditions	kg/s
R_e	Reynolds number	—[a]
SHR	Sensible heat ratio	—[a]
T	thickness of tubing insulation	m
t_a	temperature, ambient of compressor calorimeter	°C
t_{a1}	temperature of air entering the indoor-side, dry bulb	°C
t_{a2}	temperature of air leaving the indoor-side, dry bulb	°C
t_{a3}	temperature of air entering the outdoor-side, dry bulb	°C
t_{a4}	temperature of air leaving the outdoor-side, dry bulb	°C
t_c	temperature of surface of condenser of the compressor calorimeter	°C
t_e	temperature of surface of evaporator of the compressor calorimeter	°C
t_{w1}	temperature of water entering condenser of the compressor calorimeter	°C
t_{w2}	temperature of water leaving condenser of the compressor calorimeter	°C
v_a	velocity of air, at nozzle	m/s

[a] Dimensionless value.

[b] It means the mass of dry air; the mass, kg of denominator in this unit is based on dry air (or DA). For units practically used in the air conditioning field, "kg (DA)" is very often used for denominator.

Example: J/kg(DA), m^3/kg(DA), kg/kg(DA).

NOTE All parameters are in relation to the unit being tested unless specified otherwise.

© ISO 2017 – All rights reserved

Symbol	Description	Unit
v_n	specific volume of dry air portion of mixture at nozzle[b]	m^3/kg[b]
v'_n	specific volume of dry air portion of mixture at nozzle	m^3/kg
W_1	mass of cylinder and bleeder assembly, empty	g
W_3	mass of cylinder and bleeder assembly, with sample	g
W_5	mass of cylinder and bleeder assembly, with oil from sample	g
W_{i1}	specific humidity of air entering the indoor-side[b]	kg/kg[b]
W_{i2}	specific humidity of air leaving the indoor-side[b]	kg/kg[b]
W_n	specific humidity at nozzle inlet[b]	kg/kg[b]
W_r	water vapour (rate) condensed	kg/s
X_o	concentration of oil to refrigerant-oil mixture	—[a]
X_r	mass ratio, refrigerant to refrigerant-oil mixture	—[a]
Y	expansion factor	—[a]
α	pressure ratio	—[a]
α_a	Interconnecting tubing heat transfer coefficient	$W/(m^2 \cdot K)$
λ	thermal conductivity	$W/(m \cdot K)$
ν	kinematic viscosity of air	m^2/s
$\eta_{fan,i}$	estimated indoor fan static efficiency	—[a]
$\eta_{mot,i}$	estimated indoor motor efficiency	—[a]
$\sum P_{ic}$	other power input to the indoor side test chamber (e.g. illumination, electrical and thermal power input to the compensating device, heat balance of the humidification device)	W
$\sum P_{oc}$	sum of all total power input to the outdoor side test chamber, not including power to the equipment under test	W
ϕ_c	heat removed by the cooling coil in the outdoor-side test chamber	W
ϕ_{ci}	heat removed by cooling coil in the indoor-side test chamber	W
ϕ_d	latent cooling capacity (dehumidifying)	W
ϕ_e	heat input to evaporator of compressor calorimeter	W
ϕ_{hi}	heating capacity, indoor-side test chamber	W
ϕ_{ho}	heating capacity, outdoor-side test chamber	W
ϕ_{li}	heat leakage into the indoor side test chamber through walls, floor and ceiling	W
ϕ_{lo}	heat leakage out of the outdoor side test chamber through walls, floor and ceiling	W
ϕ_{lp}	heat leakage into the indoor-side test chamber through the partition separating the indoor-side from the outdoor-side	W
ϕ_L	line heat loss in interconnecting tubing	W
ϕ_{sci}	sensible cooling capacity, indoor-side	W
ϕ_{tc}	refrigerating capacity of a refrigerant compressor	W
ϕ_{tci}	total cooling capacity, indoor-side	W
ϕ_{tco}	total cooling capacity, outdoor-side	W
ϕ_{thi}	total heating capacity, indoor-side	W
ϕ_{tho}	total heating capacity, outdoor-side	W

[a] Dimensionless value.

[b] It means the mass of dry air; the mass, kg of denominator in this unit is based on dry air (or DA). For units practically used in the air conditioning field, "kg (DA)" is very often used for denominator.

Example: J/kg(DA), m^3/kg(DA), kg/kg(DA).

NOTE All parameters are in relation to the unit being tested unless specified otherwise.

© ISO 2017 – All rights reserved

5 Airflow setting

5.1 General

The airflow rate shall be specified by the manufacturer. This flow rate shall be for full-load cooling and be expressed in cubic metres per second (m^3/s) of standard air conditions, as defined in 3.3, and correspond with the compressor or compressors not operating.

P_{fan} is the estimated fan power required to circulate indoor air, in watts.

5.2 Indoor airflow setting

The airflow rate setting shall be made when only the fan is operating, at an ambient temperature between 20 °C to 30 °C and relative humidity between 30 % and 70 %. The airflow settings of the units shall be in accordance with Annex A for units supplied with a fan, and in accordance with Annex L for units supplied without a fan.

The rated airflow rate given by the manufacturer shall be set and the resulting external static pressure (ESP), p_e, measured. The measured ESP shall be not less than the ESP for rating, defined in Table 1. If the unit has an adjustable speed, it shall be adjusted to the lowest speed that provides the ESP for rating or greater.

5.3 ESP for rating

5.3.1 If the rated ESP specified by the manufacturer is greater than or equal to the minimum value given in Table 1, the specified rated ESP is used as the ESP for rating.

5.3.2 If the rated ESP specified by the manufacturer is less than the minimum value given in Table 1, and greater than or equal to 80 % of the maximum ESP, the specified rated ESP is used as the ESP for rating. The maximum ESP may either be specified by the manufacturer or be identified from fan curves provided by the manufacturer.

5.3.3 If the rated ESP specified by the manufacturer is less than the minimum value given in Table 1, and less than 80 % of the maximum ESP, the value of Table 1 or 80 % of the maximum ESP, whichever is less, is used as the ESP for rating.

5.3.4 If the rated ESP is not specified by the manufacturer, the value of Table 1 or 80 % of the maximum ESP, whichever is less, is used as the ESP for rating.

5.3.5 The process of selecting the ESP for rating is shown in Figure 1.

© ISO 2017 – All rights reserved

5.3.6 In the case that the determined ESP for rating is less than 25 Pa, the unit can be considered as a non-ducted unit and be tested in accordance with ISO 5151.

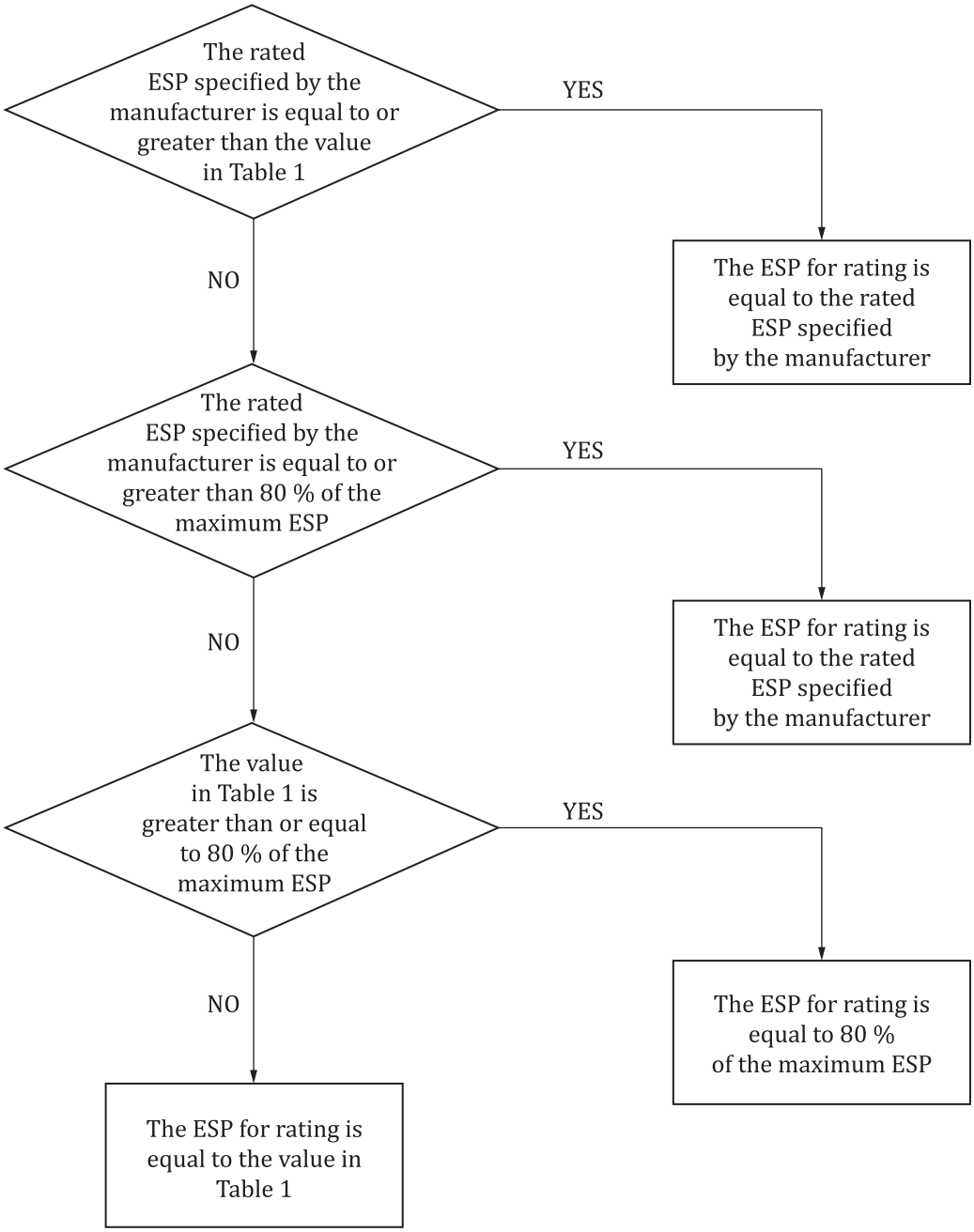

Figure 1 — Flowchart of selecting the ESP for rating

Table 1 — Pressure requirement for comfort air-conditioners

Standard capacity ratings kW	**Minimum external static pressure**[a] Pa
$0 < Q < 8$	25
$8 \leq Q < 12$	37
$12 \leq Q < 20$	50

[a] For equipment tested without an air filter installed, the minimum ESP, p_e, shall be increased by 10 Pa.

© ISO 2017 – All rights reserved

Table 1 *(continued)*

Standard capacity ratings kW	Minimum external static pressure[a] Pa
$20 \leq Q < 30$	62
$30 \leq Q < 45$	75
$45 \leq Q < 82$	100
$82 \leq Q < 117$	125
$117 \leq Q < 147$	150
$Q > 147$	175

[a] For equipment tested without an air filter installed, the minimum ESP, p_e, shall be increased by 10 Pa.

5.4 Outdoor airflow

If the outdoor airflow is adjustable, all tests shall be conducted at the outdoor-side air quantity or fan control setting that is specified by the manufacturer. Where the fan is non-adjustable, all tests shall be conducted at the outdoor-side air volume flow rate inherent in the equipment when operated with the following in place: all of the resistance elements associated with inlets, louvers, and any ductwork and attachments considered by the manufacturer as normal installation practice. Once established, the outdoor-side air circuit of the equipment shall remain unchanged throughout all tests prescribed in document, except to adjust for any change caused by the attachment of the airflow measuring device when using the outdoor air enthalpy test method (see G.2.1).

5.5 Unit supplied without indoor fan

If no fan is supplied with the unit (i.e. coil only units), supplemental requirements given in Annex L also apply.

6 Cooling tests

6.1 Cooling capacity tests

6.1.1 General conditions

6.1.1.1 All equipment within the scope of this document shall have the cooling capacities and energy efficiency ratios (EERs) determined in accordance with the provisions of this document and rated at the cooling test conditions specified in Table 2. All tests shall be carried out in accordance with the requirements of Annex B and the test methods specified in Clause 8. All tests shall be conducted with the equipment functioning at full-load operation, as defined in 3.15. The electrical input values used for rating purposes shall be measured during the cooling capacity test.

6.1.1.2 If the manufacturer of equipment having a variable-speed compressor does not provide information on the full-load frequency and how to achieve it during a cooling capacity test, the equipment shall be operated with its thermostat or controller set to its minimum allowable temperature setting.

© ISO 2017 – All rights reserved

6.1.2 Temperature conditions

6.1.2.1 The temperature conditions specified in Table 2 (columns T1, T2 and T3) shall be considered standard rating conditions for the determination of cooling capacity. For equipment intended for space cooling, testing shall be conducted at one or more of the standard rating conditions specified in Table 2.

Table 2 — Cooling capacity rating conditions

Parameter	Standard rating conditions		
	T1	T2	T3
Temperature of air entering the indoor-side: — dry-bulb — wet-bulb	27 °C 19 °C	21 °C 15 °C	29 °C 19 °C
Temperature of air entering the outdoor-side: — dry-bulb — wet-bulb[a]	35 °C 24 °C	27 °C 19 °C	46 °C 24 °C
Test frequency[b]	Rated frequency		
Test voltage	See Table 3		

NOTE

T1 = Standard cooling capacity rating conditions for moderate climates.

T2 = Standard cooling capacity rating conditions for cool climates.

T3 = Standard cooling capacity rating conditions for hot climates.

[a] The wet-bulb temperature condition shall be required only when testing air-cooled condensers that evaporate the condensate.

[b] Equipment with dual-rated frequencies shall be tested at each frequency.

6.1.2.2 Equipment manufactured for use only in a moderate climate similar to that specified in Table 2, Column T1, shall have ratings determined by tests conducted at T1 conditions and shall be designated type T1 equipment.

6.1.2.3 Equipment manufactured for use only in a cool climate similar to that specified in Table 2, Column T2, shall have ratings determined by tests conducted at T2 conditions and shall be designated type T2 equipment.

6.1.2.4 Equipment manufactured for use only in a hot climate similar to that specified in Table 2, Column T3, shall have ratings determined by tests conducted at T3 conditions and shall be designated type T3 equipment.

© ISO 2017 – All rights reserved

6.1.2.5 Equipment manufactured for use in more than one of the climates defined in Table 2 shall have marked on the nameplate the designated type (T1, T2 and/or T3). The corresponding ratings shall be determined by the standard rating conditions specified in Table 2.

Table 3 — Voltages for capacity and performance tests (except the maximum cooling and the maximum heating performance tests)

Rated (nameplate) voltages[a] V	Test voltage[b] V
90 to 109	100
110 to 127	115
180 to 207	200
208 to 253	230
254 to 341	265
342 to 420	400
421 to 506	460
507 to 633	575

[a] For equipment with dual-rated voltages such as 115/230 and 220/440, the test voltages would be 115 V and 230 V in the first example, and 220 V and 440 V in the second example. For equipment with an extended voltage range, such as 110 V to 120 V or 220 V to 240 V, the test voltage would be 115 V or 230 V, respectively. Where the extended voltage range spans two or more of the rated voltage ranges, the mean of the rated voltages shall be used to determine the test voltage from the table.

EXAMPLE For equipment with an extended voltage range of 200 V to 220 V, the test voltage would be 230 V, based on the mean voltage of 210 V.

[b] The voltages in this table are for capacity and performance tests other than the maximum cooling and the maximum heating performance tests.

6.1.3 Test conditions

6.1.3.1 Preconditions

The test room reconditioning apparatus and the equipment under test shall be operated until equilibrium conditions, as required by 8.3, are attained. Equilibrium conditions shall be maintained for not less than 1 h before capacity test data are recorded.

6.1.3.2 Duration of test

The data shall be recorded at equal intervals as required by 8.3.3. The recording of the data shall continue for at least a 30-min period during which the tolerances specified in 8.3 shall be met.

6.2 Maximum cooling performance test

6.2.1 General conditions

The test shall be conducted with the equipment functioning at full-load operation, as defined in 3.15. The test voltages in Table 4 shall be maintained at the specified percentages under running conditions. In addition, the test voltage shall be adjusted so that it is not less than 86 % of the rated voltage at the moment of restarting the equipment after the shutdown required by 6.2.4.2. The determination of cooling capacity and electrical power input is not required for this performance test.

6.2.2 Temperature conditions

Tests shall be carried out under the conditions given in Columns T1, T2 or T3 of Table 4, based on the intended use, as determined in 6.1.2. For equipment rated for use under more than one set of operating conditions, the most stringent set of the intended operating conditions shall be applied for test purposes.

© ISO 2017 – All rights reserved

Table 4 — Maximum cooling performance test conditions

Parameter	Standard rating conditions		
	T1	T2	T3
Temperature of air entering the indoor-side: — dry-bulb — wet-bulb	32 °C 23 °C	27 °C 19 °C	32 °C 23 °C
Temperature of air entering the outdoor-side: — dry-bulb — wet-bulb[a]	43 °C 26 °C	35 °C 24 °C	52 °C 31 °C
Test frequency[b]	Rated frequency		
Test voltage	a) 90 % and 110 % of rated voltage with a single nameplate voltage rating. b) 90 % of the lower rated voltage and 110 % of the higher rated voltage for equipment with a dual or extended nameplate voltage.		

[a] The wet-bulb temperature condition shall be required only when testing air-cooled condensers that evaporate the condensate.

[b] Equipment with dual-rated frequencies shall be tested at each frequency.

6.2.3 Airflow conditions

The maximum cooling performance test shall be conducted with an indoor-side fan speed setting as determined in 5.2.

6.2.4 Test conditions

6.2.4.1 Preconditions

The controls of the equipment shall be set for maximum cooling and, if provided, all ventilating air dampers and exhaust air dampers shall be closed.

6.2.4.2 Duration of test

The equipment shall be operated continuously for 1 h after the specified air temperatures in Table 4 have been established in accordance with tolerance in Table 13. Thereafter, all power to the equipment shall be cut off for 3 min and then restored. The operation of the equipment may be restarted either automatically or through the use of a remote controller or similar device. The test shall continue for 60 min after the equipment restarts.

6.2.5 Performance requirements

6.2.5.1 Air-conditioners and heat pumps shall meet the following requirements when operating under the conditions specified in Table 4:

a) during one entire test, the equipment shall operate without any indication of damage;

b) the motors of the equipment shall operate continuously for the first hour of the test without tripping the motor-overload protective devices;

c) after the interruption of power, the equipment shall resume operation within 30 min and run continuously for 1 h except as specified in 6.2.5.2 and 6.2.5.3. See Figure 2.

© ISO 2017 – All rights reserved

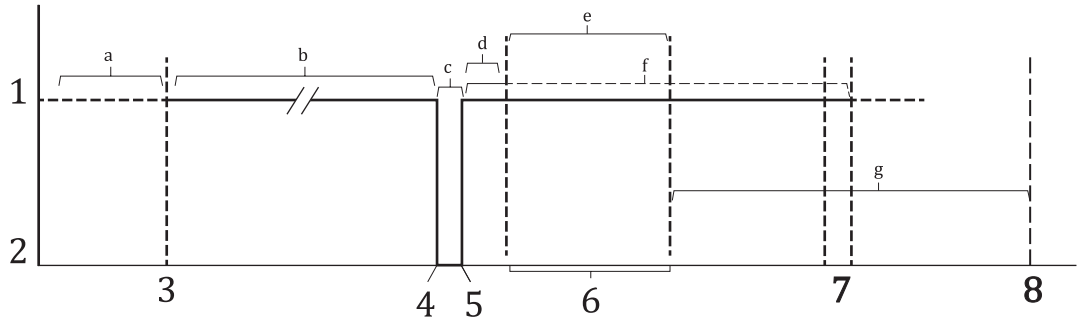

Key

1 power supply to equipment unit is on

2 power supply to equipment is off

3 official test period begins

4 power supply to equipment is turned off

5 power supply to equipment is turned back on

6 maximum time before equipment resumes continuous operation

7 end of test, if equipment restarted upon re-energization of power

8 end of test, if equipment, if equipment utilized full 30 min for protective device to reset

a 30 min, steady-state operation

b 60 min, continuous operation running at reduced or increased supply voltage

c 3 min, power off

d 5 min, in which a protective device may trip

e 30 min

f,g 60 min of continuous operation after equipment restarts

Figure 2 — Maximum performance test operation

6.2.5.2 A protective device may trip only during the first 5 min of operation after the shutdown period of 3 min. During the remainder of that 1 h test period, no protective device shall trip. The equipment shall be permitted to start and stop under the control of an automatic limit device, if provided.

6.2.5.3 For those models so designed that resumption of operation does not occur after the initial trip within the first 5 min, the equipment may remain out of operation for not longer than 30 min. It shall then operate continuously for 1 h.

6.3 Minimum cooling performance test

6.3.1 General conditions

The test and operating conditions specified in Table 5 shall be used when conducting the minimum cooling performance test. The test shall be conducted with the equipment functioning at full-load operation, as defined in 3.15, except as required in 6.3.3. The determination of cooling capacity and electrical power input is not required for this performance test.

6.3.2 Temperature conditions

Tests shall be carried out under the temperature conditions established in Table 5.

6.3.3 Airflow conditions

The controls, fan speeds, dampers and grilles of the equipment shall be set to maximize the tendency for frost or ice to form on the evaporator, provided such settings are not contrary to the manufacturer's operating instructions. The test apparatus shall remain in the configuration established in 5.2 and in Annex A.

© ISO 2017 – All rights reserved

6.3.4 Test conditions

6.3.4.1 Preconditions

The equipment shall be started and operated until the operating conditions have stabilized according to Tables 5 and 13.

6.3.4.2 Duration of test

After the operating conditions given in Table 5 have stabilized, in accordance with the test tolerance in Table 13, the equipment shall be operated for a period of 4 h. The equipment shall be permitted to stop and start under the control of an automatic limit device, if provided.

Table 5 — Minimum cooling performance test conditions

Parameter	Standard test conditions	
	T1 and T3	T2
Temperature of air entering the indoor-side: — dry-bulb — wet-bulb	21 °C 15 °C	21 °C 15 °C
Temperature of air entering the outdoor-side: — dry-bulb — wet-bulb[a]	21 °C —	10 °C —
Test frequency[b]	Rated frequency	
Test voltage	See Table 3	

[a] The wet-bulb temperature condition shall be required only when testing air-cooled condensers that evaporate the condensate.

[b] Equipment with dual-rated frequencies shall be tested at each frequency.

6.3.5 Performance requirements

6.3.5.1 The equipment shall operate under the conditions specified without any indication of damage.

6.3.5.2 At the end of the 4-h test, any accumulation of frost or ice on the indoor coil shall not cover more than 50 % of the indoor-side face area of the coil or reduce the airflow rate by more than 25 % of the initial airflow rate. If the equipment does not allow visual observation of the indoor coil and if the indoor air volume rate is not measured, then the requirements of 6.3.5.3 shall be met.

6.3.5.3 During the 4-h test period, the midpoint temperature of every indoor coil circuit or the refrigerant suction pressure shall be measured at equal intervals that span 1 min or less. The measurement(s) carried out 10 min after beginning the 4-h test shall be defined as the initial value(s). If the suction pressure is measured, it shall be used to calculate the saturated suction temperature.

a) If the compressor(s) do not cycle OFF on automatic controls during the test, and

— if coil circuit temperature(s) are measured, the temperature(s) shall not remain more than 2 K below the corresponding initial value for each circuit for more than 20 consecutive minutes, or

— if suction pressure is measured, the saturated suction temperature shall not remain more than 2 K below the initial value for more than 20 consecutive minutes.

 © ISO 2017 – All rights reserved

b) If the compressor(s) cycle ON/OFF on automatic controls during the test, and

— if coil circuit temperature(s) are measured, the individual circuit temperature(s) measured 10 min after the beginning of any ON cycle during the test shall not be more than 2 K below the corresponding initial circuit temperature(s), or

— if suction pressure is measured, the saturated suction temperature measured 10 min after the beginning of any ON cycle during the test shall not be more than 2 K below the initial saturated suction temperature.

If the indoor fan is stopped by the automatic controls during the test, the airflow through the indoor coil shall be reduced to zero.

6.4 Condensate control and enclosure sweat performance test

6.4.1 General conditions

The conditions which shall be used during the condensate control and enclosure sweat test are given in Table 6. The test shall be conducted with the equipment functioning at full-load operation, as defined in 3.15, except as required in 6.4.3. The determination of cooling capacity and electrical power input is not required for this performance test.

6.4.2 Temperature conditions

The temperature conditions which shall be used during this test are given in Table 6.

6.4.3 Airflow conditions

The controls, fans, dampers and grilles of the equipment shall be set to produce the maximum tendency to sweat, provided such settings are not contrary to the manufacturer's operating instructions.

6.4.4 Test conditions

6.4.4.1 Preconditions

After establishment of the specified temperature conditions, the equipment shall be started with its condensate collection pan filled to the overflowing point, and the equipment shall be run until the condensate flow has become uniform.

6.4.4.2 Duration of test

The equipment shall be operated for a period of 4 h.

6.4.5 Performance requirements

6.4.5.1 When operating under the test conditions specified in Table 6, no condensed water shall drip, run or blow from the equipment.

© ISO 2017 – All rights reserved

6.4.5.2 Equipment which rejects condensate to the condenser air shall dispose of all condensate and there shall be no dripping or blowing-off of water from the equipment such that the building or surroundings become wet.

Table 6 — Condensate control test conditions

Parameter	Standard test conditions
Temperature of air entering the indoor-side: — dry-bulb — wet-bulb	27 °C 24 °C
Temperature of air entering the outdoor-side: — dry-bulb — wet-bulb[a]	27 °C 24 °C
Test frequency[b]	Rated frequency
Test voltage	See Table 3

[a] The wet-bulb temperature condition shall be required only when testing air-cooled condensers that evaporate the condensate.

[b] Equipment with dual-rated frequencies shall be tested at each frequency.

7 Heating tests

7.1 Heating capacity tests

7.1.1 General conditions

7.1.1.1 For all heating capacity tests, the requirements specified in Annex B shall apply. Testing shall be conducted using the method(s) and instrumentation that meet the requirements of 8.1 and 8.2.

7.1.1.2 Selectable resistive elements used for heating indoor air shall be prevented from operating during all heating capacity tests, except those used only during a defrost cycle.

7.1.1.3 The test setup shall include instrumentation to allow measurement of the temperature change across the indoor coil. If using the indoor air enthalpy method, the same dry-bulb temperature sensors as used to measure capacity may be used. If using the calorimeter test method, the temperature change shall be determined using the sensors specified in Annex D.

7.1.1.4 Standard rating conditions for heating capacity tests are specified in Table 7.

7.1.1.5 All Clause 7 heating capacity tests shall be conducted with the heat pump functioning at full-load operation, as defined in 3.15.

7.1.1.6 The manufacturer shall specify, for inverter-controlled compressors, the specific frequency that is needed to give full-load operation. The heat pump shall be maintained at this frequency for all heating capacity tests. If the manufacturer of a heat pump having a variable-speed compressor fails to provide information on the full-load operating frequency and how to achieve it during heating capacity tests,

 © ISO 2017 – All rights reserved

then the heat pump shall be operated with its thermostat or controller set to its maximum allowable temperature setting.

Table 7 — Heating capacity rating conditions

Parameter	Standard rating conditions		
	H1[a]–moderate cold condition	H2[a]–cold condition	H3[a]–very cold condition
Temperature of air entering the indoor-side: — dry-bulb — wet-bulb (maximum)	20 °C 15 °C		
Temperature of air entering the outdoor-side: — dry-bulb — wet-bulb	7 °C 6 °C	2 °C 1 °C	−7 °C −8 °C
Test frequency[b]	Rated frequency		
Test voltage	See Table 3		

[a] If a defrosting cycle occurs during the H1, H2 or H3 heating capacity tests, testing under these conditions shall be accomplished using either the calorimeter or the indoor air enthalpy method (see Annexes D and E).

[b] Equipment with dual-rated frequencies shall be tested at each frequency.

7.1.2 Temperature conditions

7.1.2.1 Three different outdoor-side temperature conditions, designated as H1-moderate cold condition, H2-cold condition, and H3-very cold condition, are specified in Table 7.

7.1.2.2 Table 7 temperature conditions for the air entering the indoor-side of the equipment shall be used for all heating capacity tests.

7.1.2.3 All heat pumps shall be rated based on testing at the H1-moderate cold condition temperature conditions. Heating capacity tests shall also be conducted at the H2-cold condition and/or H3-very cold condition temperature if the manufacturer rates the equipment for operation at one or both of these temperature conditions.

7.1.2.4 If the heat pump is rated for operation at two frequencies or, in some cases, if the equipment has a dual-rated voltage, then more than one heating capacity test shall be conducted at each applicable outdoor-side temperature condition. Table 7 (and Table 3) shall be used to determine if additional heating capacity tests are required.

7.1.3 Airflow conditions

7.1.3.1 General conditions

7.1.3.1.1 Measurement of the indoor-side air volume rate is required in all cases, regardless of whether the calorimeter test method or the indoor air enthalpy test method is used to provide the primary measurement of heating capacity.

7.1.3.1.2 Airflow measurements shall be made in accordance with the provisions specified in Annex C, as appropriate, as well as the provisions established in the other appropriate annexes of this document.

NOTE All airflow rates are expressed in units of m^3/s of standard air. In the heating capacity calculations described in Annex E, the indoor-side airflow rate is expressed in units of m^3/s of the air-water vapour mixture.

© ISO 2017 – All rights reserved

7.1.3.1.3 When tests are conducted at settings other than those prescribed in 7.1.3.1.1 and 7.1.3.1.2, these alternative settings shall be noted together with the heating capacity ratings.

7.1.3.2 Requirements when testing heat pumps that provide both cooling and heating

7.1.3.2.1 Equipment settings, on both the indoor and the outdoor-sides, shall be the same as those established during the cooling capacity tests. The heating capacity tests shall be conducted at the outdoor-side airflow rate that is inherent with the outdoor-side air circuit, with the exception of any adjustments allowed if using the outdoor air enthalpy test method (see Annex G).

7.1.3.2.2 Heating capacity tests shall be conducted with the same setting of the damper or exhaust fan as for the cooling capacity test. If cooling capacity tests are conducted for more than one climatic condition (T1, T2, T3), with different flow rates, then the setting giving the highest flow rate shall be used to conduct the heating capacity tests.

7.1.3.3 Requirements when testing heating-only heat pumps

7.1.3.3.1 On the outdoor-side of the heat pump, all resistance elements associated with inlets, louvers, and any ductwork and attachments considered by the manufacturer as normal installation practice shall be installed. If the outdoor airflow is adjustable, all tests shall be conducted at the outdoor-side fan control setting that is specified by the manufacturer. Once established, the outdoor-side air circuit of the equipment shall remain unchanged throughout all tests prescribed in this document, except to adjust for any change caused by the attachment of the airflow measuring device when using the outdoor air enthalpy test method (see Annex G).

7.1.3.3.2 On the indoor-side of the heat pump, damper positions, fan speeds, etc. shall be set in accordance with the manufacturer's published installation instructions that are provided with the equipment. In the absence of such installation instructions, damper positions, fan speeds, etc. shall be set to provide the maximum heating capacity when testing at the H1 temperature conditions.

7.1.3.3.3 The heat pump setup used for the H1 test shall be used during the H2 and/or H3 tests, if conducted. There is no minimum required ESP, p_e, when testing at the H2 and H3 test conditions.

7.1.4 Defrost operation

7.1.4.1 Overriding of automatic defrost controls shall be prohibited. The controls may only be overridden when manually initiating a defrost cycle during preconditioning.

7.1.4.2 Any defrost cycle, whether automatically or manually initiated, that occurs while preparing for or conducting a heating capacity test shall always be automatically terminated by the heat pump defrost controls.

7.1.4.3 If the heat pump turns the indoor fan off during the defrost cycle, airflow through the indoor coil shall cease.

7.1.5 Test procedure — General

7.1.5.1 The test procedure consists of three periods: a preconditioning period, an equilibrium period, and a data collection period. The duration of the data collection period differs depending upon whether the heat pump's operation is steady-state or transient. In the case of transient operation, in addition, the data collection period specified when using the indoor air enthalpy method (see 7.1.11.5) is different to the data collection period required if using the calorimeter method (see 7.1.11.6).

 © ISO 2017 – All rights reserved

7.1.5.2 Annex M represents pictorially most of the different test sequences that are possible when conducting a heating capacity test.

7.1.6 Preconditioning period

7.1.6.1 The test room preconditioning apparatus and the heat pump under test shall be operated until the test tolerances specified in 8.3 are attained for at least 10 min.

7.1.6.2 A defrost cycle may end a preconditioning period. If a defrost cycle does end a preconditioning period, the heat pump shall operate in the heating mode for at least 10 min after defrost termination, prior to beginning the equilibrium period.

7.1.6.3 It is recommended that the preconditioning period end with an automatic or manually induced defrost cycle when testing at the H2 and H3 temperature conditions.

7.1.7 Equilibrium period

7.1.7.1 The equilibrium period immediately follows the preconditioning period.

7.1.7.2 A complete equilibrium period is 1 h in duration.

7.1.7.3 Except as specified in 7.1.11.3, the heat pump shall operate while meeting the test tolerances in 8.3.

7.1.8 Data collection period

7.1.8.1 The data collection period immediately follows the equilibrium period.

7.1.8.2 Data shall be collected as specified in 8.1 for the chosen test method(s). If using the calorimeter method, heating capacity shall be calculated as specified in Annex D. If using the indoor air enthalpy method, the heating capacity shall be calculated as specified in Annex E. For cases where one of the confirmative test methods from 8.1.3 is used, heating capacity shall be calculated as specified in the appropriate annex.

7.1.8.3 An integrating electrical power (watt-hour) meter or measuring system shall be used for measuring the electrical energy supplied to the equipment. During defrost cycles and for the first 10 min following a defrost termination, the meter or measuring system shall have a sampling rate of at least every 10 s.

7.1.8.4 Except as specified in 7.1.8.3 and 7.1.8.5, data shall be sampled at equal intervals that span 30 s or less.

7.1.8.5 During defrost cycles, plus the first 10 min following defrost termination, certain data used in evaluating the integrated heating capacity of the heat pump shall be sampled at equal intervals that span 10 s or less. When using the indoor air enthalpy method, these more frequently sampled data include the change in indoor-side dry-bulb temperature. When using the calorimeter method, these more frequently sampled data include all measurements required to determine the indoor-side capacity.

7.1.8.6 For heat pumps that automatically cycle off the indoor fan during a defrost, the contribution of the net heating delivered and/or the change in indoor-side dry-bulb temperature shall be assigned the value of zero when the indoor fan is off, if using the indoor air enthalpy method. If using the calorimeter test method, the integration of capacity shall continue while the indoor fan is off.

© ISO 2017 – All rights reserved

7.1.8.7 For both the indoor air enthalpy and the calorimeter test methods, the difference between the dry-bulb temperature of the air leaving and entering the indoor coil shall be measured. For each 5-min interval during the data collection period, an average temperature difference shall be calculated, $\Delta t_i(\tau)$. The average temperature difference for the first 5 min of the data collection period, $\Delta t_i(\tau=0)$, shall be saved for the purpose of calculating the change, Δt, expressed as a percentage, as given in Formula (1):

$$\%\Delta t = \left(\frac{\Delta t_{i(\tau=0)} - \Delta t_{i(\tau)}}{\Delta t_{i(\tau=0)}} \right) \times 100 \quad (1)$$

7.1.9 Test procedure when a defrost cycle (whether automatically or manually initiated) ends the preconditioning period

7.1.9.1 If the quantity $\%\Delta t$ exceeds 2,5 % during the first 35 min of the data collection period, the heating capacity test shall be designated a transient test (see 7.1.11). Likewise, if the heat pump initiates a defrost cycle during the equilibrium period or during the first 35 min of the data collection period, the heating capacity test shall be designated a transient test.

7.1.9.2 If the conditions specified in 7.1.9.1 do not occur and the test tolerances given in 8.3 are satisfied during both the equilibrium period and the first 35 min of the data collection period, then the heat capacity test shall be designated a steady-state test. Steady-state tests shall be terminated after 35 min of data collection.

7.1.10 Test procedure when a defrost cycle does not end the preconditioning period

7.1.10.1 If the heat pump initiates a defrost cycle during the equilibrium period or during the first 35 min of the data collection period, the heating capacity test shall be restarted as specified in 7.1.10.3.

7.1.10.2 If the quantity $\%\Delta t$ exceeds 2,5 % at any time during the first 35 min of the data collection period, the heating capacity test shall be restarted as specified in 7.1.10.3. Prior to the restart, a defrost cycle shall occur. This defrost cycle may be manually initiated or delayed until the heat pump initiates an automatic defrost.

7.1.10.3 If either 7.1.10.1 or 7.1.10.2 apply, then the restart shall begin 10 min after the defrost cycle terminates with a new, hour-long equilibrium period. This second attempt shall follow the requirements of 7.1.7 and 7.1.8 and the test procedure of 7.1.9.

7.1.10.4 If the conditions specified in 7.1.10.1 or 7.1.10.2 do not occur and the test tolerances given in 8.3 are satisfied during both the equilibrium period and the first 35 min of the data collection period, then the heating capacity test shall be designated a steady-state test. Steady-state tests shall be terminated after at least 35 min of data collection.

7.1.11 Test procedure for transient tests

7.1.11.1 When, in accordance with 7.1.9.1, a heating capacity test is designated a transient test, the adjustments specified in 7.1.11.2 to 7.1.11.6 shall apply.

7.1.11.2 The outdoor air enthalpy test method shall not be used and its associated outdoor-side measurement apparatus shall be disconnected from the heat pump. In all cases, the normal outdoor-side airflow of the heat pump shall not be disturbed. Use of other confirming test methods is not required.

7.1.11.3 To constitute a valid transient heating capacity test, the test tolerances specified in Table 8 shall be achieved during both the equilibrium period and the data collection period. As noted in Table 8, the test tolerances are specified for two sub-intervals. Interval H consists of data collected during each

 © ISO 2017 – All rights reserved

heating interval, with the exception of the first 10 min after defrost termination. Interval D consists of data collected during each defrost cycle plus the first 10 min of the subsequent heating interval.

7.1.11.4 The test tolerance parameters in Table 8 shall be determined throughout the equilibrium and data collection periods. All data collected during each interval, H or D, shall be used to evaluate compliance with the Table 8 test tolerances. Data from two or more H intervals or two or more D intervals shall not be combined and then used in evaluating Table 8 compliance. Compliance shall be based on evaluating data from each interval separately.

7.1.11.5 If using the indoor air enthalpy method, the data collection period shall be continued until 3 h have elapsed or until the heat pump completes three complete cycles during the period, whichever occurs first. If at an elapsed time of 3 h, the heat pump is conducting a defrost cycle, the cycle shall be completed before terminating the collection of data. A complete cycle consists of a heating period and a defrost period, from defrost termination to defrost termination.

7.1.11.6 If using the calorimeter method, the data collection period shall be continued until 6 h have elapsed or until the heat pump completes six complete cycles during the period, whichever occurs first. If at an elapsed time of 6 h, the heat pump is conducting a defrost cycle, the cycle shall be completed before terminating the collection of data. A complete cycle consists of a heating period and a defrost period, from defrost termination to defrost termination.

NOTE Consecutive cycles are repeated with similar frost and defrost intervals before data is selected for use in calculating the integrated capacity and power.

7.1.11.7 Because of the confirming test method requirement of 8.1.3, the outdoor air enthalpy test apparatus may have to be disconnected from the heat pump, as specified in 7.1.11.2, during a heating capacity test. If removal during a test is required, the changeover interval shall not be counted as part of the elapsed time of the equilibrium or data collection periods. The changeover interval shall be defined as starting at the instant the heating capacity test is designated a transient test and ending when the test tolerances from Table 8 are first re-established after the outdoor air enthalpy apparatus is disconnected from the heat pump.

Table 8 — Variations allowed in heating capacity tests when using the transient (T) test procedure

Reading	Variation of arithmetical mean values from specified test conditions		Variation of individual readings from specified test conditions	
	Interval H[a]	Interval D[b]	Interval H[a]	Interval D[b]
Temperature of air entering the indoor-side:				
— dry-bulb	±0,6 K	±1,5 K	±1,0 K	±2,5 K
— wet-bulb	—	—	—	—
Temperature of air entering the outdoor-side:				
— dry-bulb	±0,6 K	±1,5 K	±1,0 K	±5,0 K
— wet-bulb	±0,3 K	±1,0 K	±0,6 K	—
Voltage	—	—	±2 %	±2 %
External resistance to airflow	±5 Pa	—	±5 Pa	—

[a] Applies when the heat pump is in the heating mode, except for the first 10 min after termination of a defrost cycle.

[b] Applies during a defrost cycle and during the first 10 min after the termination of a defrost cycle when the heat pump is operating in the heating mode.

© ISO 2017 – All rights reserved

7.1.12 Heating capacity test results

7.1.12.1 The electrical energy supplied to the heat pump during the test shall be recorded, along with the corresponding elapsed time, at the termination of each defrost cycle during the data collection period, if applicable, and at the termination of the data collection period.

7.1.12.2 Average heating capacity and average electrical power input shall be calculated in accordance with 9.1.4. For transient tests, the quantities shall be calculated using data from the total number of complete cycles that are achieved before the data collection period is terminated. In the event that a complete cycle does not occur during the data collection period of a transient test, the entire data set shall be used for the calculations (see 9.1.4.2).

7.2 Maximum heating performance test

7.2.1 General conditions

The conditions given in Table 9 shall be used during the maximum heating performance test. The test shall be conducted with the equipment functioning at full-load operation, as defined in 3.15.

The test voltages in Table 9 shall be maintained at the specified percentages under running conditions.

The determination of heating capacity and electrical power input is not required for this performance test.

7.2.2 Temperature conditions

The temperature conditions given in Table 9 shall be used during these tests unless the manufacturer specifies higher temperature conditions in the manufacturer's equipment specification sheets.

Table 9 — Maximum heating performance test conditions

Parameter	Standard test conditions
Temperature of air entering the indoor-side: — dry-bulb	27 °C
Temperature of air entering the outdoor-side: — dry-bulb — wet-bulb	24 °C 18 °C
Test frequency[a]	Rated frequency
Test voltage	a) 90 % and 110 % of rated voltage for equipment with a single nameplate voltage rating b) 90 % of the lower rated voltage and 110 % of the higher rated voltage for equipment with a dual or extended nameplate voltage
[a] Equipment with dual-rated frequencies shall be tested at each frequency.	

7.2.3 Airflow conditions

The maximum heating performance test shall be conducted with an indoor-side fan speed setting as determined in 5.2 and Annex A, except as required in 7.2.4.1. For heating-only heat pumps, the indoor-side fan speed shall be set as specified in 7.1.3.3, except as required in 7.2.4.1.

© ISO 2017 – All rights reserved

7.2.4 Test conditions

7.2.4.1 Preconditions

The controls of the equipment shall be set for maximum heating. All ventilating air dampers and exhaust air dampers, if provided, shall be closed.

7.2.4.2 Duration of test

The equipment shall be operated for 1 h after the specified air temperatures have been attained from Table 9 and Table 13. The equipment shall be permitted to stop and start under the control of an automatic limit device, if provided.

7.2.5 Performance requirements

The equipment shall operate under the conditions specified in Table 9 and 7.2.4.2, without indication of damage. The equipment shall be permitted to stop and start under the control of an automatic limit device, if provided. After the interruption of operation, the equipment shall resume operation within 30 min. See Figure 2.

7.3 Minimum heating performance test

7.3.1 General conditions

The conditions given in Table 10 shall be used for this test. The test shall be conducted with the equipment functioning at full-load operation, as defined in 3.15. The voltage shall be maintained at the specified value under running conditions. The determination of heating capacity and electrical power input is not required for this performance test. This test is only applicable to units including a rating to region H3.

7.3.2 Temperature conditions

The temperature conditions of this test shall be as given in Table 10.

7.3.3 Airflow conditions

The minimum heating test shall be conducted using the indoor-side airflow rate as determined in 5.2 and Annex A.

7.3.4 Test conditions

7.3.4.1 Preconditions

The equipment shall be operated for 1 h under the temperature conditions and voltage specified in Table 10.

© ISO 2017 – All rights reserved

Table 10 — Minimum heating performance test conditions

Parameter	Standard test conditions
Temperature of air entering the indoor-side: — dry-bulb	20 °C
Temperature of air entering the outdoor-side: — dry-bulb — wet-bulb	–7 °C –8 °C
Test frequency[a]	Rated frequency
Test voltage[b]	See Table 3

[a] Equipment with dual-rated frequencies shall be tested at each frequency.

[b] Equipment with dual-rated voltage shall be tested at the higher voltage. This requirement for testing at a single voltage shall supersede.

7.3.4.2 Duration of test

After the equipment has reached stable operating conditions in accordance with Table 10 and Table 13, these conditions shall be maintained for 1 h.

7.3.5 Performance requirements

The equipment shall operate throughout the test, without activation of any manually reset device. The equipment shall be permitted to stop and start under the control of an automatic limit device, if provided.

The equipment shall operate under the conditions specified in Table 10 and 7.3.4.2, without indication of damage.

7.4 Automatic defrost performance test

7.4.1 General conditions

This test is not required if provision is made to ensure that cool air (less than 18 °C) is not blown into the conditioned space during defrost. The test shall be conducted with the equipment functioning at full-load operation, as defined in 3.15, except as required in 7.4.3. The conditions for test frequency and test voltage given in Table 7 shall be used during the automatic defrost test. The determination of heating capacity and electrical power input is not required for this performance test.

7.4.2 Temperature conditions

The temperature of air entering the indoor-side shall be set as specified in Table 7. The temperature of air entering the outdoor-side shall be set as specified for the H2 test conditions in Table 7.

7.4.3 Airflow conditions

Unless prohibited by the manufacturer, the indoor-side fan is to be adjusted to the highest speed and the unit outdoor-side fan to the lowest speed, if separately adjustable. All other parameters shall be set as specified in 7.1.3.1.

7.4.4 Test conditions

7.4.4.1 Duration of test

The equipment shall be operated until the temperatures specified for H2 conditions in Table 7 have been stabilized.

© ISO 2017 – All rights reserved

The heat pump shall remain in operation for two complete defrosting periods or for 3 h, whichever is longer.

7.4.5 Performance requirements

During the defrosting period, the temperature of the air from the indoor-side of the equipment shall not be lower than 18 °C for longer than 1 min.

8 Test methods and uncertainties of measurement

8.1 Test methods

8.1.1 General

Capacity tests shall be conducted in accordance with the testing requirements specified in Annex B using either the calorimeter test method (see Annex D) or the indoor air enthalpy test method (see Annex E), subject to the provision that the test results are within the limits of uncertainty of measurement established in 8.2.

8.1.2 Calorimeter test method

8.1.2.1 When using the calorimeter method for cooling capacity tests and for steady-state heating capacity tests, two simultaneous methods of determining capacities shall be used. One method determines the capacity on the indoor-side, the other measures the capacity on the outdoor-side. The capacity determined using the outdoor-side data shall agree to within 5 % of the value obtained using the indoor-side data in order for the test to be valid.

8.1.2.2 Steady-state conditions are achieved when the measured capacity at each 5-min time interval does not vary by more than 2 % from the average measured capacity over the previous 35 min.

8.1.2.3 The apparatus used to make the indoor-side airflow and static pressure measurements shall be located within the indoor-side test chamber of the calorimeter for all tests except for where the fixed duct resistance method specified in A.3 is used for setting the airflow. In this case, the airflow measuring apparatus may be removed after the damper has been set in order to obtain the required airflow and external static pressure as specified in Annex A.

8.1.3 Indoor air enthalpy method

8.1.3.1 For cooling capacity tests and steady-state heating capacity tests, a test of confirmation is recommended to verify the results obtained using the indoor air enthalpy test method. One of the following test methods can be used for confirmative purposes:

a) refrigerant enthalpy test method (see Annex F);

b) outdoor air enthalpy test method (see Annex G);

c) indoor calorimeter confirmative test method (see Annex H);

d) outdoor calorimeter confirmative test method (see Annex I);

e) balanced-type calorimeter confirmative test method (see Annex J).

NOTE Annex J is not to be used as a confirmative test by testing laboratories (see J.1.1).

© ISO 2017 – All rights reserved

8.1.3.2 The results of the primary test shall agree with the results of the confirmative test to within 5 % in order to be valid.

Steady-state conditions are achieved when the measured capacity at each 5-min time interval does not vary by more than 2,5 % from the average measured capacity over the previous 35 min.

8.1.4 Capacity tests

On the cooling cycle, it is recommended that the latent cooling capacity be determined using the cooling condensate method (see Annex M) subject to the provision that the test results are within the limits of uncertainty of measurement established in 8.2.

8.2 Uncertainty of measurement

8.2.1 The uncertainties of measurement shall not exceed the values specified in Table 11.

NOTE Uncertainties of measurement can be estimated. ISO/TS 16491 is available as appropriate guidance. See Reference [4].

Table 11 — Uncertainty of measurement

Measured quantity	Uncertainty of measurement[a]
Water:	
— temperature	0,1 °C
— temperature difference	0,1 °C
— volume flow	1 %
— static pressure difference	5 %
Air:	
— dry-bulb temperature	0,2 °C
— wet-bulb temperature greater than 0 °C[b]	0,2 °C
— wet-bulb temperature less than or equal to 0 °C[b]	0,3 °C
— volume flow	5 %
— static pressure difference	5 Pa for pressure ≤100 Pa 5 % for pressure >100 Pa
Electrical measurements	0,5 %
Time	0,2 %
Mass	1,0 %
Speed	1,0 %
Refrigerant pressure	2,0 %

NOTE Uncertainty of measurement comprises, in general, many components. Some of these components may be estimated on the basis of the statistical distribution of the results of series of measurements and can be characterized by experimental standard deviations. Estimates of other components can be based on experience or other information. ISO/TS 16491 is available as an appropriate guidance.

[a] Uncertainty of measurement is an estimate characterizing the range of values within which the true value of the measurement lies, based on a 95 % confidence interval (see ISO/IEC Guide 98-3).

[b] Can be measured directly or indirectly.

8.2.2 The steady-state cooling and heating capacities determined using the calorimeter method shall be determined with a maximum uncertainty of 5 %. This value is an expanded uncertainty of measurement expressed at the level of confidence of 95 %.

© ISO 2017 – All rights reserved

8.2.3 Heating capacity determined during transient operation (defrost cycles) using the calorimeter method shall be determined with a maximum uncertainty of 10 %. This value is an expanded uncertainty of measurement expressed at the level of confidence of 95 %.

8.2.4 The heating and cooling capacities measured on the air side using the air enthalpy method shall be determined with a maximum uncertainty of 10 %. This value is an expanded uncertainty of measurement expressed at the level of confidence of 95 %.

8.3 Test tolerances for steady-state cooling and heating capacity tests

8.3.1 The maximum permissible variation of any individual observation from a specified test condition during steady-state cooling and heating capacity tests is listed in column 3 of Table 12. If a test condition is not specified, the values in column 3 of Table 12 represent the greatest permissible difference between maximum and minimum instrument observations during the test. When expressed as a percentage, the maximum allowable variation is the specified percentage of the arithmetical average of the observations.

Table 12 — Variations allowed during steady-state cooling and heating capacity tests

Reading	Variations of arithmetical mean values from specified test conditions	Maximum variation of individual readings from specified test conditions
Temperature of air entering the indoor-side: — dry-bulb — wet-bulb	±0,3 K ±0,2 K[a]	±0,5 K ±0,3 K[a]
Temperature of air entering the outdoor-side: — dry-bulb — wet-bulb	±0,3 K ±0,2 K[b]	±0,5 K 0,3 K[b]
Voltage	±1 %	±2 %
Air volume flow rate[c]	±5 %	±10 %

[a] Not applicable for heating tests.

[b] Only applies to cooling capacity tests if equipment rejects condensate to the outdoor coil.

[c] Only applies to the indoor air enthalpy method. The test condition is defined as the measured arithmetical mean of airflow taken within the first 5 min of the data collection period.

8.3.2 The maximum permissible variations of the average of the test observations from this document or specified test conditions are shown in column 2 of Table 12.

8.3.3 For cooling capacity tests, the dry-bulb and the wet-bulb temperatures of the air entering the indoor-side and outdoor-side shall be sampled at equal intervals spanning 30 s or less throughout the preconditioning and data collection periods. The specified sampling of the wet-bulb temperature of the air entering the outdoor-side shall be waived for equipment that rejects condensate to a location other than the outdoor coil.

8.3.4 For steady-state heating capacity tests, the dry-bulb temperature of the air entering the indoor-side and the dry-bulb and wet-bulb temperatures of the air entering the outdoor-side shall be sampled at equal intervals spanning 30 s or less throughout the preconditioning and data collection periods.

8.3.5 Except as noted in 8.3.3, all applicable parameters from Table 11 shall be sampled at equal intervals that span 5 min or less during cooling capacity tests. Except as noted in 8.3.4, all applicable parameters from Table 12 shall be sampled at equal intervals spanning 30 s or less during heating capacity tests

© ISO 2017 – All rights reserved

8.3.6 For the preconditioning period, equilibrium shall be defined as an interval of specified duration where the applicable test tolerances in Table 13 are satisfied. When a defrost cycle occurs during the preconditioning period of a heating capacity test, the parameters sampled between defrost initiation and 10 min after defrost termination shall be excluded when evaluating compliance to the test tolerances in Table 13. As noted in 7.1.8.5, the sampling frequency of the indoor dry-bulb temperature is subject to change during defrost cycles, if using the indoor air enthalpy test method.

8.3.7 For the data collection period used in determining the equipment's measured space conditioning capacity, compliance with the applicable test tolerances in Table 13 shall be achieved.

8.4 Test tolerances for performance tests

The maximum allowable variation of any individual observation made during a performance test from the specified test condition is established in Table 13.

Table 13 — Test tolerances for performance tests

Readings	Maximum variation of individual readings from specified test conditions[a]
Air temperatures: — dry-bulb — wet-bulb	 ±1,0 K ±0,5 K
Voltage	±2 %

[a] The test tolerances do not apply when the equipment is stopped, when changing compressor speed or from defrost initiation to 10 min after defrost termination. Exceptionally, during these intervals, dry-bulb temperature tolerances of ±2,5 K on the indoor-side and ±5 K on the outside shall apply.

9 Test results

9.1 Capacity results

9.1.1 General

The results of a capacity test shall express quantitatively the effects produced upon the air by the equipment tested. For given test conditions, the capacity test results shall include the following quantities as applicable to cooling or heating:

a) total cooling capacity, in watts;

b) sensible cooling capacity, in watts;

c) latent cooling capacity, in watts;

d) heating capacity, in watts;

e) indoor-side airflow rate, in cubic metres per second of standard air;

f) external resistance to indoor airflow, in pascals;

g) effective power input to the equipment or individual power inputs to each of the electrical equipment components, in watts.

NOTE For determination of latent cooling capacity, see Annex D if using the calorimeter test method and Annex E if using the indoor air enthalpy test method.

 © ISO 2017 – All rights reserved

9.1.2 Adjustments

Test results shall be used to determine capacities without adjustment for permissible variations in test conditions. Air enthalpies, specific volumes and isobaric specific heat capacities shall be based on the measured barometric pressure, p_a.

For calorimetric testing, variations from standard barometric pressure can have an impact on the measured capacity. If capacity, adjusted for standard barometric pressure, is additionally reported, an explanation of the adjustment method should be included in the test report.

9.1.3 Cooling capacity calculations

9.1.3.1 An average cooling capacity shall be determined from the set of cooling capacities recorded over the data collection period of at least 30 min.

9.1.3.2 An average electrical power input shall be determined from the set of electrical power inputs recorded over the data collection period or from the integrated electrical power for the same interval, for cases where an electrical energy meter is used.

9.1.3.3 Standard ratings of capacities shall include the effects of circulating-fan heat, but shall not include supplementary heat. For units provided without a fan, the effect of the fan to be taken into account shall be calculated according to Annex L.

9.1.4 Heating capacity calculations

9.1.4.1 Steady-state capacity tests

9.1.4.1.1 If the heating capacity test is conducted in accordance with the provisions of 7.1.9.2 or 7.1.10.4, a heating capacity shall be calculated using data from each data sampling, in accordance with Annex D if using the calorimeter test method, or in accordance with Annex E if using the indoor air enthalpy test method.

9.1.4.1.2 An average heating capacity shall be determined from the set of heating capacities recorded over the data collection period (see Example 1 in Annex M).

9.1.4.1.3 An average electrical power input shall be determined from the set of electrical power inputs recorded over the data collection period or from the integrated electrical power inputs recorded over the data collection period or from the integrated electrical power recorded over the data collection period.

9.1.4.2 Transient capacity tests

9.1.4.2.1 If the heating capacity test is conducted in accordance with the provisions of 7.1.11, an average heating capacity shall be determined. This average heating capacity shall be calculated as specified in Annex D if using the calorimeter test method and as specified in Annex E if using the indoor air enthalpy test method.

9.1.4.2.2 For equipment where one or more complete cycles occur during the data collection period, the following shall apply. The average heating capacity shall be determined using the integrated capacity and the elapsed time corresponding to the total number of complete cycles that occurred over the data collection period (see Examples 4, 5 and 6 in Annex M). The average electrical power input shall be determined using the integrated power input and the elapsed time corresponding to the total number of complete cycles during the same data collection period as the one used for the heating capacity.

NOTE A complete cycle consists of a heating period and defrost period from defrost termination to defrost termination.

© ISO 2017 – All rights reserved

9.1.4.2.3 For equipment that does not conduct a complete cycle during the data collection period, the following shall apply. The average heating capacity shall be determined using the integrated capacity and the elapsed time corresponding to the total data collection period (3 h if using the indoor air enthalpy test method; 6 h if using the calorimeter test method). The average electrical power input shall be determined using the integrated power input and the elapsed time corresponding to the same data collection period as the one used for the heating capacity (see Example 2 in Annex M).

9.1.4.2.4 For equipment in which a single defrost occurs during the test period, the following shall apply. The average heating capacity shall be determined using the integrated capacity and the elapsed time corresponding to the total test period (3 h if using the indoor air enthalpy test method; 6 h if using the calorimeter test method). The average electrical power input shall be determined using the integrated power input and the elapsed time corresponding to the total test period (see Example 3 in Annex M).

9.2 Data to be recorded

The data to be recorded for the capacity tests are given in Tables 14 and 15 for the calorimeter test method, in Table 16 for the indoor air enthalpy test method and in Table 17 for the blowing test. The tables identify the required general information but are not intended to limit the data to be obtained. Electrical input values used for rating purposes shall be those measured during the capacity tests.

Table 14 — Data to be recorded for calorimeter cooling capacity tests

No.	Data
1	Date
2	Observers
3	Barometric pressure, in kPa
4	Fan speed settings, indoor and outdoor
5	Applied voltage, in V
6	Frequency, in Hz
7	Total current input to equipment, in A
8	Total power input to equipment[a], in W
9	Setting of variable capacity compressor at full load
10	Dry-bulb and wet-bulb temperatures of air (indoor-side calorimeter test chamber)[b], in °C
11	Dry-bulb and wet-bulb temperature of air (outdoor-side calorimeter test chamber)[b], in °C
12	Average air temperature outside the calorimeter, if calibrated (see Figure D.1), in °C
13	Total power input to indoor-side and outdoor-side test chamber, in kW
14	Quantity of water evaporated in humidifier, in kg
15	Temperature of humidifier water entering indoor-side and outdoor-side (if used) test chambers or in humidifier tank, in °C
16	Cooling water flow rate through outdoor-side test chamber heat-rejection coil, in l/s
17	Temperature of cooling water entering outdoor-side test chamber, for heat-rejection coil, in °C
18	Temperature of cooling water leaving outdoor-side test chamber, for heat-rejection coil, in °C
19	Mass of water from equipment which is condensed in the reconditioning equipment[c], in kg
20	Temperature of condensed water leaving outdoor-side test chamber, in °C
21	Volume of airflow through measuring nozzle of the separating partition, in m^3/s
22	Air-static pressure difference across the separating partition of calorimeter test chambers, in Pa
23	Refrigerant charge added by the test house, in kg

[a] Total power input to the equipment, except if more than one external power connection is provided on the equipment; record input to each connection separately.

[b] For equipment which evaporates condensate on the outdoor coil.

© ISO 2017 – All rights reserved

Table 14 *(continued)*

No.	Data
24	External resistance to airflow, in Pa
25	Volume flow rate of air and all relevant measurements for its calculation, in m^3/s
26	Factory charge, in kg

[a] Total power input to the equipment, except if more than one external power connection is provided on the equipment; record input to each connection separately.

[b] For equipment which evaporates condensate on the outdoor coil.

Table 15 — Data to be recorded for calorimeter heating capacity tests

No.	Data
1	Date
2	Observers
3	Barometric pressure, in kPa
4	Fan speed settings, indoor and outdoor
5	Applied voltage, in V
6	Frequency, in Hz
7	Total current input to equipment, in A
8	Total power input to equipment[a], in W
9	Setting of variable capacity compressor at full load
10	Dry-bulb and wet-bulb temperatures of air (indoor-side calorimeter test chamber), in °C
11	Dry-bulb and wet-bulb temperature of air (outdoor-side calorimeter test chamber), in °C
12	Average air temperature outside the calorimeter, if calibrated (see Figure D.1), in °C
13	Total power input to indoor-side and outdoor-side test chamber, in W
14	Quantity of water evaporated in humidifier, in kg
15	Temperature of humidifier water entering indoor-side and outdoor-side (if used) test chambers or in humidifier tank, in °C
16	Cooling water flow rate through indoor-side test chamber heat-rejection coil, in l/s
17	Temperature of cooling water entering indoor-side test chamber, for heat-rejection coil, in °C
18	Temperature of cooling water leaving indoor-side test chamber, for heat-rejection coil, in °C
19	Mass of water from equipment which is condensed in the outdoor-side test chamber, in kg
20	Temperature of condensed water leaving outdoor-side test chamber, in °C
21	Volume of airflow through measuring nozzle of the separating partition, in m^3/s
22	Air-static pressure difference across the separating partition of calorimeter test chambers, in Pa
23	Refrigerant charge added by the test house, in kg
24	External static pressure (ESP), in Pa
25	Volume flow rate of air and all relevant measurements for its calculation, in m^3/s
26	Airflow Coefficient, in $Pa/(m^3/s)^2$
27	Factory charge, in kg

[a] Total power input to the equipment, except if more than one external power connection is provided on the equipment; record input to each connection separately.

© ISO 2017 – All rights reserved

Table 16 — Data to be recorded during the indoor air enthalpy capacity tests

No.	Data
1	Date
2	Observers
3	Barometric pressure, in kPa
4	Time of test
5	Power input to equipment[a], in W
6	Energy input to equipment[b], in Wh
7	Applied voltage(s), in V
8	Current, in A
9	Frequency, in Hz
10	External static pressure (ESP), in Pa
11	Fan speed settings, indoor and outdoor
12	Setting of variable capacity compressor at full load
13	Dry-bulb temperature of air entering equipment, in °C
14	Wet-bulb temperature of air entering equipment, in °C
15	Dry-bulb temperature of air leaving equipment, in °C
16	Wet-bulb temperature of air leaving equipment, in °C
17	Outdoor dry-bulb and wet-bulb temperatures, in °C
18	Volume flow rate of air and all relevant measurements for its calculation, in m^3/s
19	Refrigerant charge added by the test house, in kg
20	Airflow Coefficient, in $Pa/(m^3/s)^2$
21	Factory charge, in kg

[a] Total power input and, where required, input to equipment components.

[b] Energy input to equipment is required only during defrost operations.

Table 17 — Data to be recorded for the blowing test

No.	Data
1	Date
2	Observers
3	Applied voltage, in V
4	Frequency, in Hz
5	Total current input to equipment, in A
6	Total power input to equipment, in W
7	Fan speed setting, indoor
8	Dry-bulb temperatures of the inlet air, °C
9	Wet-bulb temperatures of the inlet air, °C
10	Barometric pressure, in kPa
11	External static pressure (ESP) p_e, (p_m for A.4 adjusted exhaust fan setting method), in Pa
12	Value of C (calculate from Formula (A.2) for A.4 adjusted exhaust fan setting method)
13	Static pressure of the discharge chamber (applies to A.3 Fixed duct resistance method), in Pa
14	Dry-bulb temperatures at the nozzle inlet, °C
15	Pressure at the nozzle inlet, in kPa
16	Static pressure difference at the nozzle or nozzle velocity pressure, p_v, in Pa

© ISO 2017 – All rights reserved

Table 17 *(continued)*

No.	Data
17	Air mass flow rate, q_m, (kg/s)
18	Air volume flow rate, q_v, in m^3/s
19	Standard air flow rate, q_s, in m^3/s

9.3 Test report

9.3.1 General information

As a minimum, the test report shall contain the following general information:

a) a reference to this document, i.e. ISO 13253;

b) the date;

c) the test institute;

d) the test location;

e) the primary test and confirming test methods;

f) the test supervisor;

g) the cooling climate type designations and heating rating conditions (i.e. T1, T2, T3, H1, H2 and H3);

h) a description of the test setup, including equipment location;

i) the nameplate information (see 10.2).

9.3.2 Capacity test results

The values reported shall be the mean of the values taken over the data collection period and shall be stated with an uncertainty of measurement at a confidence level of 95 % and in accordance with ISO/IEC Guide 98-3.

9.3.3 Performance tests

The test report shall indicate whether the test passed or failed based upon recorded data.

For all performance tests relevant information shall be recorded to show the specific requirements for each test has been met. This shall be as a minimum the data requirements of Tables 14, 15, 16 or 17 (as appropriate) recorded at least once every 5 min, and additionally.

9.3.3.1 For Maximum cooling performance tests (6.2):

— current, in amperes, recorded at least once every 5 min;

— time at which the power to the unit was interrupted;

— time(s) at which the unit automatically starts and/or stops operating.

9.3.3.2 For Freeze-up drip performance test (6.4):

— pictures or sketches of the unit at the end of the test that clearly depict any areas of moisture outside of the unit.

© ISO 2017 – All rights reserved

9.3.3.3 For Condensate control and enclosure sweat performance test (6.4):

— pictures or sketches of the unit at the end of the test that clearly depict any areas of moisture outside of the unit.

9.3.3.4 For Maximum heating performance test (7.2):

— current, in amperes, recorded at least every 5 min;

— time(s) at which the unit automatically starts and/or stops operating.

9.3.3.5 For Automatic defrost performance test (7.4):

— temperature of the air leaving the indoor-side of the equipment, in degrees Celsius, recorded at least once every 1 min.

NOTE No additional data is required for Minimum heating performance test (7.3).

10 Marking provisions

10.1 Nameplate requirements

Each individual unit of the air-conditioner and heat pump, single package and split-system assembly, shall have a durable nameplate, firmly attached and in a location accessible for reading.

10.2 Nameplate information

The nameplate shall carry the following minimum information:

a) the manufacturer's name or trademark;

b) any distinctive type or model designation and serial number;

c) rated voltage(s);

d) rated frequency(ies);

e) cooling climate designations and heating rating condition type(s) (i.e. T1, T2, T3, H1, H2 and H3, as applicable);

f) refrigerant designation in accordance with ISO 817, or specified in the national regulations;

g) the factory refrigerant mass charge (listed on the unit containing the compressor).

10.3 Split systems

The information in 10.2 a), b), c), d) and f) shall also be provided on each indoor element of a split system.

11 Publication of ratings

11.1 Standard ratings

11.1.1 Standard ratings shall be published for cooling capacities (sensible, latent and total), heating capacity, air volume rate, ESP, EER and COP for each unit produced in conformance with this document. These ratings shall be based on data obtained at the established rating conditions in accordance with the provisions of this document

 © ISO 2017 – All rights reserved

11.1.2 The values of the standard capacities shall be expressed in kilowatts or watts, rounded to three significant figures.

11.1.3 The values of EER and COP shall be rounded to three significant figures.

11.1.4 Each capacity rating shall be followed by the corresponding test voltage (see column 2 of Table 3) and frequency rating.

11.2 Other ratings

Additional ratings may be published based on conditions other than those specified as standard rating conditions or based on conditions specified in national regulations, if they are clearly specified and the data are determined by the methods specified in this document by analytical methods which are verifiable by the test methods specified in this document.

© ISO 2017 – All rights reserved

Annex A
(normative)

Airflow settings for ducted units

A.1 General

Two methods of setting are applicable:

a) fixed duct resistance method;

b) adjusted exhaust fan setting method.

Both methods, with their respective test apparatus, are described in this annex.

To measure the static pressure of the discharge air from the ducted equipment, a measuring duct is connected to the duct flange of the equipment. This measuring duct is used for both methods. If the dimensions of the outlet duct section are A and B, the equivalent diameter, D_e, is determined using Formula (A.1):

$$D_e = \sqrt{\frac{(4AB)}{\pi}} \tag{A.1}$$

In the case that the outlet duct is circular in section with diameter, D, the equivalent diameter, D_e, is equal to D.

The length of the measuring duct, L_d, shall be no smaller than $2{,}5D_e$. The static pressure taps should be located at a distance $L_m = 2D_e$ from the outlet flange.

A.2 Test method

A.2.1 The flow setting of the units shall be by means of the fixed duct resistance method, as shown in Figure A.1, or the adjusted exhaust fan setting method, as shown in Figure A.2.

A.2.2 The static pressure measurement taps shall be arranged as shown in Figure A.1 and Figure A.2. The unit under test shall be operated without the compressor running.

A.2.3 Airflow measurements should be made in accordance with the provisions specified in Annex C, as appropriate, as well as other provisions established in this document.

NOTE Additional guidance concerning airflow measurements can be found in ISO 3966 and ISO 5167-1.

A.3 Fixed duct resistance method

A.3.1 General

A measuring duct shall be connected to the test unit and a damper installed on the opposite end of the measuring duct, to which a discharge chamber is connected. The discharge chamber shall have sufficient cross-sectional dimensions so that airflow velocities along the wall surface at the static

 © ISO 2017 – All rights reserved

pressure tap (Figure A.1, key item 4) is 1,25 m/s or less. The minimum length of the discharge chamber in the flow direction, J, is $2D_e$.

NOTE The setup of the test unit, measuring duct and the discharge chamber is illustrated in Figure A.1.

A.3.2 Test procedure

A.3.2.1 Test conditions

The temperature and humidity conditions of the test room shall be within the range specified in 5.2. The test unit shall be operated in the blowing mode without the compressor running. The damper shall be adjusted so that the rated airflow rate in standard air is obtained. At the same time, the airflow rate of the airflow measuring apparatus shall be adjusted so that static pressure in the discharge chamber is (0 ± 2) Pa. The above conditions shall be maintained for at least 1 h. External static pressure shall be maintained per Table A.1 during the blowing test.

Table A.1 — Variations allowed during blowing test

Reading	Variation of arithmetical mean values from specified test conditions		Variation of individual readings from specified test conditions	
	≤100 Pa	>100 Pa	≤100 Pa	>100 Pa
External static pressure (ESP)	±0,5 Pa	±5 %	±0,10 Pa	±10 %

A.3.2.2 Blowing test

The dry- and wet-bulb temperatures of the inlet air, airflow rate, ESP (p_e), dry- and wet-bulb temperatures in front of the nozzle, and barometric pressure (p_a) shall be measured. The measured airflow rate, q_m, shall be calculated according to Formula (C.3). The measured airflow rate, q_m, shall be converted into the standard flow rate, q_s according to Formula C.8.

A.3.2.3 Evaluation

The ESP, p_e, shall be that specified by 5.2.

A.3.2.4 Cooling and heating tests

The damper's position shall remain fixed at the setting obtained in A.3.2.1, for all cooling and heating tests, which shall be conducted at the respective temperature and humidity conditions. During the cooling and heating tests, the static pressure of the discharge chamber shall be maintained at (0 ± 2) Pa.

The ESP, p_e, of the measuring duct at the cooling and heating tests is for reference only, and therefore it does not need to be published. The airflow rate measured when the equipment is operating in the cooling or heating mode is used for calculation of cooling and heating capacities.

© ISO 2017 – All rights reserved

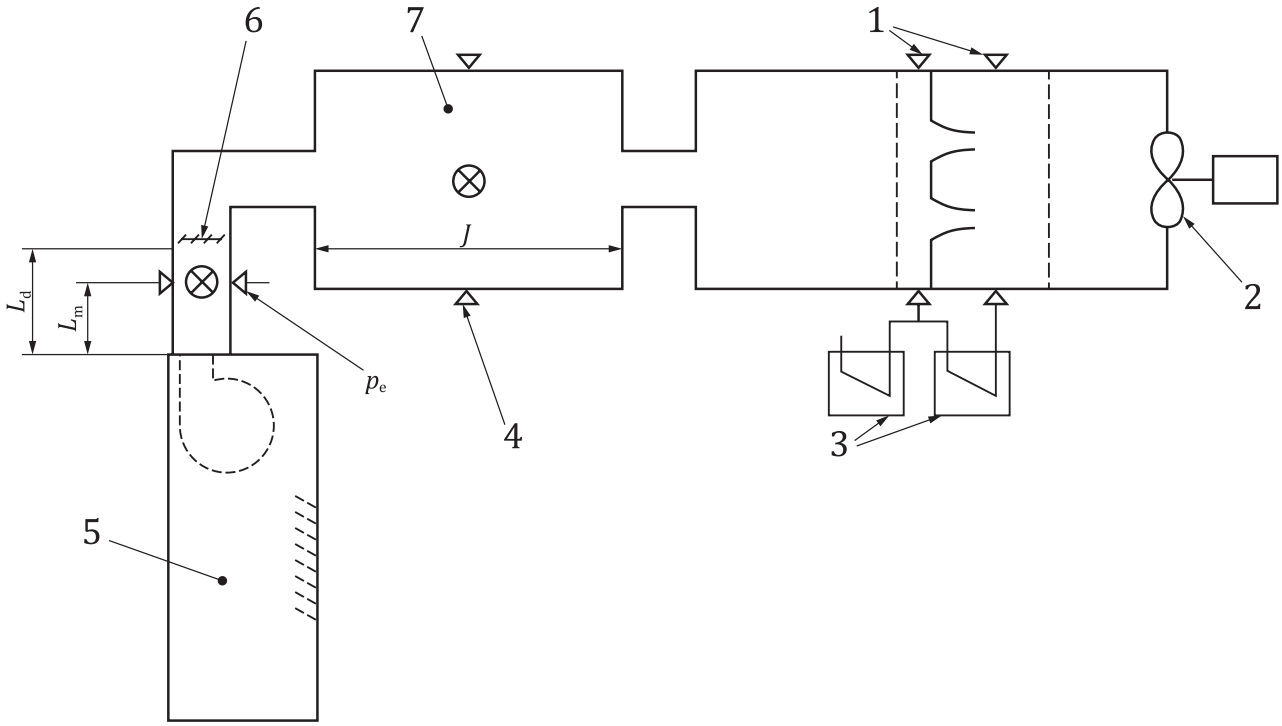

Key

1	airflow measuring apparatus	7	discharge chamber
2	exhaust fan	J	minimum length
3	manometers	L_d	length of the measuring duct
4	static pressure taps of discharge chamber	L_m	distance to static pressure taps
5	equipment under test	p_e	ESP of the equipment under test
6	damper		

Figure A.1 — Fixed duct resistance method — Setup

A.4 Adjusted exhaust fan setting method

A.4.1 General

A measuring duct shall be connected to the test unit and an airflow measuring apparatus connected to the opposite end of the measuring duct.

NOTE The setup of the test unit, measuring duct and the airflow measuring apparatus is illustrated in Figure A.2.

A.4.2 Test procedure

The temperature and humidity conditions of the test room shall be within the range specified in 5.2. The test unit is operated in the blowing mode without the compressor running. The airflow measuring apparatus shall be adjusted so that the rated airflow rate in standard air is obtained. The above conditions shall be maintained for at least 1 h. External static pressure shall be maintained per Table A.1 during the blowing test.

A.4.3 Blowing test

The dry- and wet-bulb temperatures of the inlet air, airflow rate, ESP (p_e), dry- and wet-bulb temperatures in front of the nozzle, and barometric pressure shall be measured. The measured

 © ISO 2017 – All rights reserved

airflow rate, q_m, shall be calculated according to Formula (C.3). The measured airflow rate, q_m, shall be converted into the standard flow rate, q_s according to Formula C.8.

A.4.4 Calculation of the value of C

Calculate the value of C, determined from Formula (A.2):

$$C = \frac{p_m}{q_m^{\ 2}} \tag{A.2}$$

where

p_m is external static pressure at the measuring duct, Pa, especially for blowing test using adjusted exhaust fan setting method, and p_m is considered to be equal to the external static pressure, p_e.

A.4.5 Evaluation

The ESP, p_e, shall be that specified by 5.2.

A.4.6 Cooling and heating tests

Cooling and heating tests shall be performed following the blowing test, at their respective temperature and humidity conditions. The speed of the exhaust fan of the airflow measuring apparatus shall be adjusted for the cooling and heating tests in the following manner.

For the cooling test, operate the equipment with the compressor in the cooling mode and allow the temperature to stabilize. Once the temperature is stabilized, adjust the airflow measuring apparatus to achieve the same value of C by changing its exhaust fan speed in small increments. The resulting value of C shall be in the range of ±1 % from that measured during the blowing test. Once stabilized, the cooling airflow rate and ESP shall be measured.

For the heating test, repeat the cooling test above, except with the compressor operating in the heating mode. Measure the heating airflow rate and ESP.

The airflow rate measured when the equipment is operating in the cooling or heating mode shall be used for calculation of cooling and heating capacities.

The ESP of the measuring duct during the cooling and heating tests is for reference only, and therefore it does not need to be published.

© ISO 2017 – All rights reserved

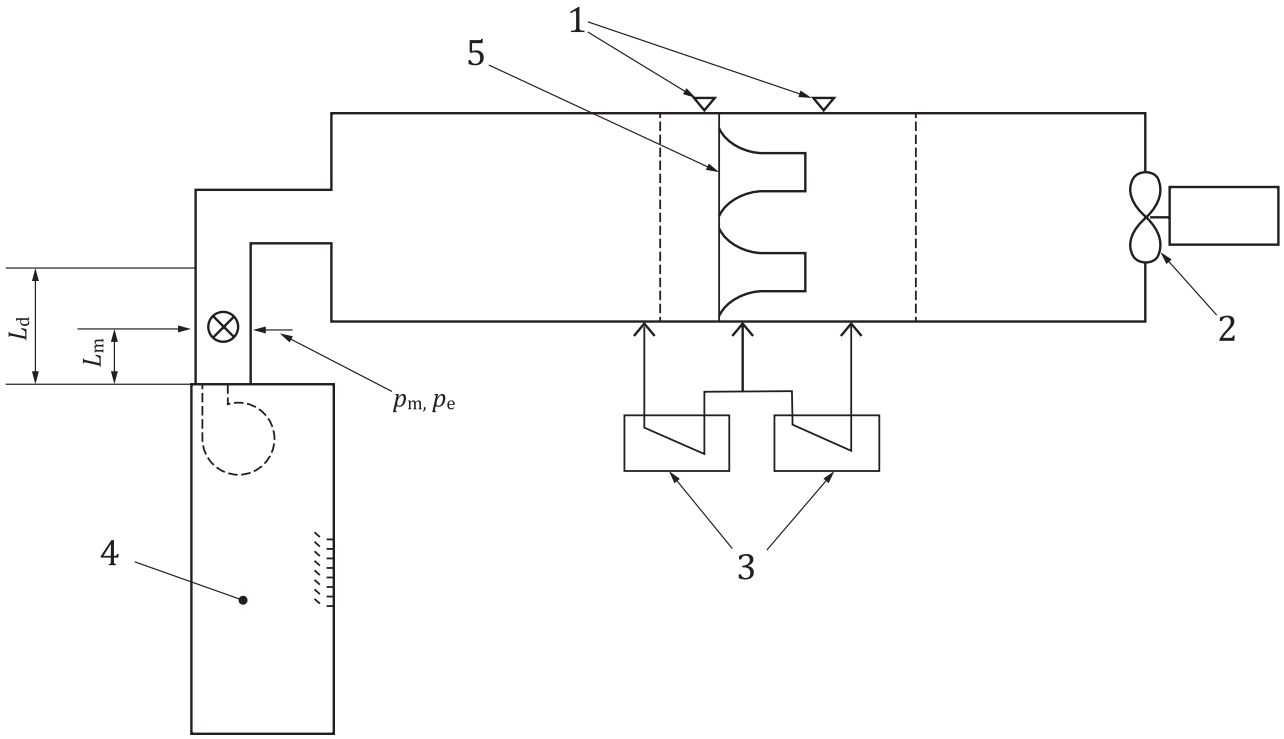

Key

1 airflow measuring apparatus

2 exhaust fan

3 manometers

4 equipment under test

5 nozzles

L_d length of the measuring duct

L_m distance to static pressure taps

p_e ESP of the equipment under test

p_m external static pressure at the measuring duct, especially for blowing test using adjusted exhaust

Figure A.2 — Adjusted exhaust fan setting method setup

A.5 Unit without indoor fan

If no fan is supplied with the unit, i.e. coil-only units, the supplemental requirements specified in Annex L shall also apply.

© ISO 2017 – All rights reserved

Annex B
(normative)

Test requirements

B.1 General test room requirements

B.1.1 If an indoor condition test room is required, it shall be a room or space in which the desired test conditions can be maintained within the prescribed tolerances. It is recommended that air velocities in the vicinity of the equipment under test do not exceed 2,5 m/s.

B.1.2 If an outdoor condition test room or space is required, it shall be of sufficient volume and shall circulate air in such a manner that it does not change the normal air circulating pattern of the equipment under test. It shall be of such dimensions that the distance from any room surface to any equipment surface from which air is discharged is not less than 1,8 m and the distance from any other room surface to any other equipment surface is not less than 1,0 m, except for floor or wall relationships required for normal equipment installation. The room conditioning apparatus should handle air at a rate not less than the outdoor airflow rate, and preferably should take this air from the direction of the equipment air discharge and return it at the desired conditions uniformly and at low velocities.

B.1.3 If the calorimeter room method is used with a facility having more than two rooms, then the additional rooms shall also comply with the requirements of Annex D. If the air enthalpy method is used with a facility having more than two rooms, the additional rooms shall also comply with the requirements of Annex E.

B.2 Equipment installation

B.2.1 The equipment to be tested shall be installed in accordance with the manufacturer's installation instructions using recommended installation procedures and accessories. If the equipment can be installed in multiple positions, all tests shall be conducted using the least favourable configuration according to the manufacturer's recommendation. In all cases, the manufacturer's recommendations with respect to distances from adjacent walls, amount of extension through walls, etc. shall be followed.

B.2.2 Ducted equipment rated at less than 8 kW and intended to operate at an ESP, p_e, of less than 25 Pa shall be tested at free delivery of air according to ISO 5151.

B.2.3 No other alterations to the equipment shall be made except for the attachment of the required test apparatus and instruments in the prescribed manner.

B.2.4 If necessary, the equipment shall be evacuated and charged with the type and amount of refrigerant specified in the manufacturer's instructions.

B.2.5 All standard ratings for equipment in which the condenser and the evaporator are two separate assemblies shall be determined on the basis of the manufacturer's specifications within 5 m to 7,5 m of connecting tubing on each line. The lengths shall be actual lengths, not equivalent lengths, and no account shall be taken of the resistance provided by bends, branches, connecting boxes or other fittings used in the installation for the test piece. The length of the connecting tubing shall be measured from the enclosure of the indoor unit to the enclosure of the outdoor unit. Any equipment in which the interconnecting tubing is furnished as an integral part of the unit, and not recommended for cutting to length, shall be tested with the complete length of tubing furnished. Not less than 40 % of the total length

© ISO 2017 – All rights reserved

of the interconnecting tubing shall be exposed to the outdoor conditions with the rest of the tubing exposed to the indoor conditions. The line diameters, insulation, details of installation, evacuation and charging shall be in accordance with the manufacturer's published recommendations.

B.3 Static pressure measurements across indoor coil

B.3.1 Equipment with a fan and a single outlet

B.3.1.1 A short plenum shall be attached to the outlet of the equipment. This plenum shall have cross-sectional dimensions equal to the dimensions of the equipment outlets. A static pressure tap shall be added at the centre of each side of the discharge plenum, if rectangular, or at four evenly distributed locations along the circumference of an oval or round plenum. These four static pressure taps shall be manifolded together. The minimum length of the discharge plenum and the location of the static pressure taps relative to the equipment outlets shall be as shown in Figure B.1, if testing a split-system, and as shown in Figure B.2, if testing a single-package unit.

B.3.1.2 A short plenum should be attached to the inlet of the equipment. If used, the inlet plenum shall have the same cross-sectional dimensions as the equipment inlet. In addition, four static pressure taps shall be added and manifolded together. This plenum should otherwise be constructed as shown for the inlet plenum in Figure B.2, if testing a single-package unit, and as shown in Figure B.3, if testing a split-system.

NOTE Figure B.3 is referenced here for guidance even though it specifically applies to ducted units tested without an indoor fan.

B.3.2 Equipment with fans and multiple outlets or multiple indoor units

B.3.2.1 Equipment with multiple outlet duct connections or multiple indoor units shall have a short plenum attached to each outlet connection or indoor unit, respectively. Each of these short plenums shall be constructed as described in B.3.1.1, including static pressure taps. All outlet plenums shall discharge into a single common duct section. For the purpose of equalizing the static pressure in each plenum, an adjustable restrictor shall be located in the plane where each outlet plenum enters the common duct section. Multiple blower units employing a single discharge duct connection flange shall be tested with a single outlet plenum in accordance with B.3.1. Any other test plenum arrangements shall not be used except to stimulate duct designs specifically recommended by the equipment manufacturer.

B.3.2.2 A short plenum should be attached to the inlet of each inlet duct connection or indoor unit. Each of these short plenums shall be constructed as described in B.3.1.2, including static pressure taps

B.3.3 Equipment without a fan and a single outlet

For an indoor coil that does not incorporate a fan, a short plenum shall be attached to both the inlet and outlet of the equipment. These plenums shall have cross-sectional dimensions equal to the dimensions of the equipment inlet and outlet, respectively. A static pressure tap shall be added at the centre of each side of each plenum, if rectangular, or at four evenly distributed locations along the circumference of oval or round plenums. For each plenum, the four static pressure taps shall be manifolded together. The minimum length of the plenums and the location of the static pressure taps relative to the equipment inlet and outlet shall be as shown in Figure B.3.

 © ISO 2017 – All rights reserved

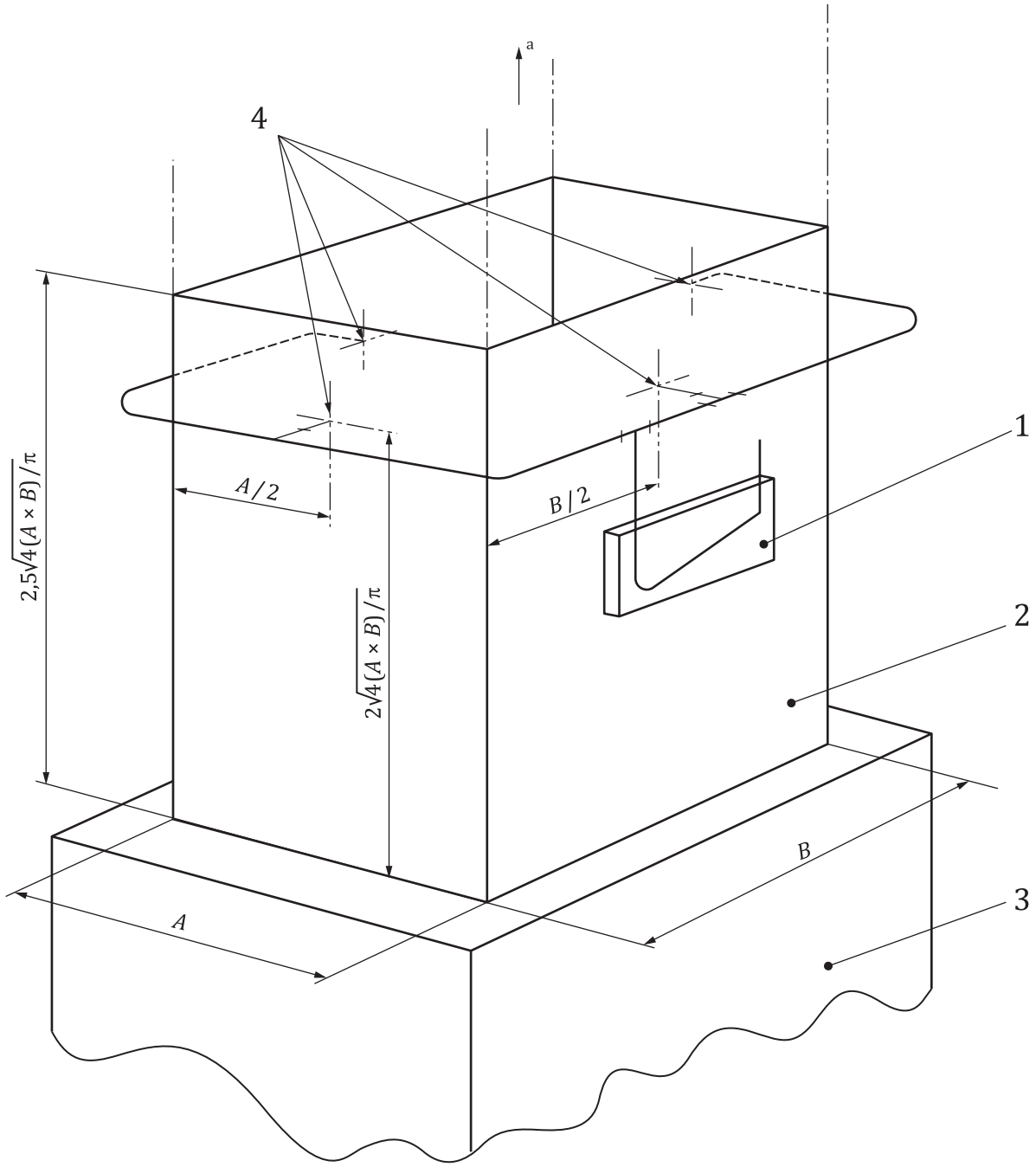

Key

1 manometer

2 exhaust plenum

3 equipment under test

4 static pressure taps

a To airflow-measuring apparatus.

NOTE *A* and *B* are dimensions of the equipment under test.

Figure B.1 — ESP measurement — Split system

© ISO 2017 – All rights reserved

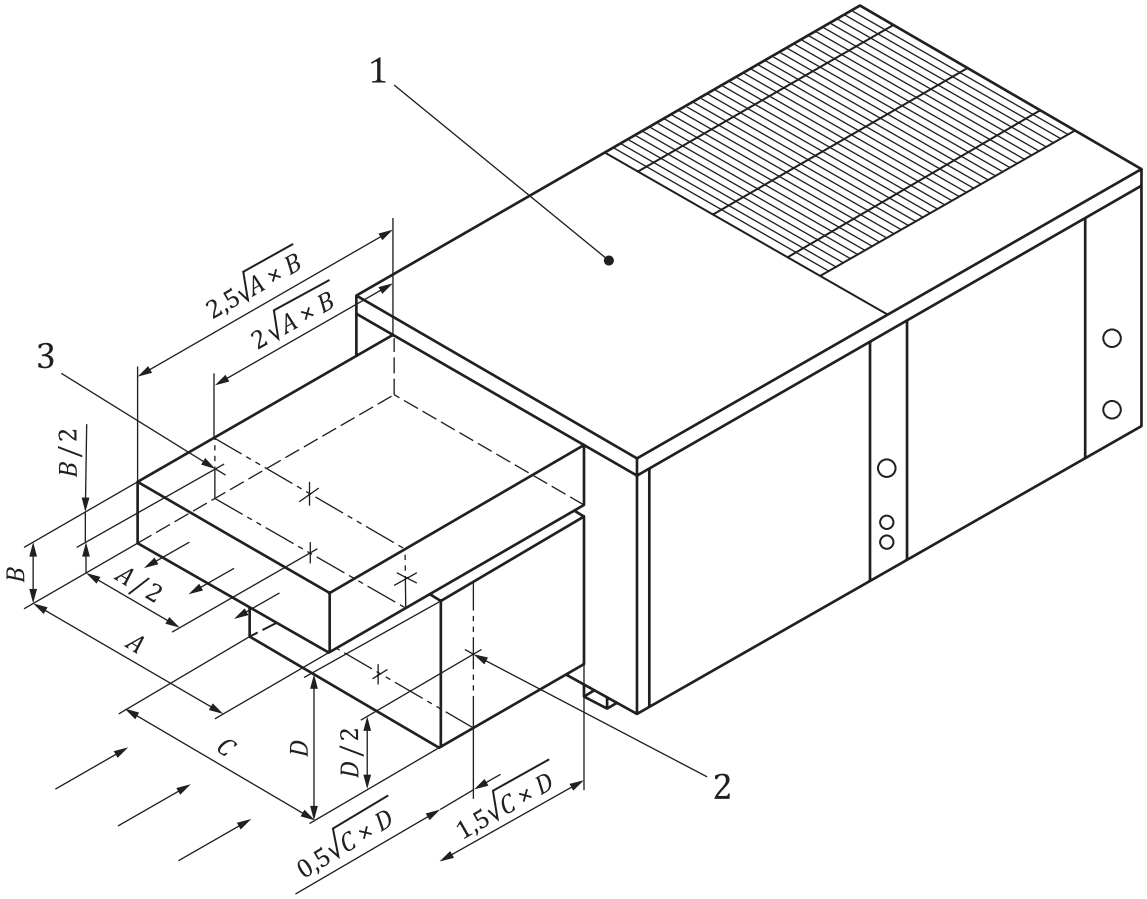

a)

© ISO 2017 – All rights reserved

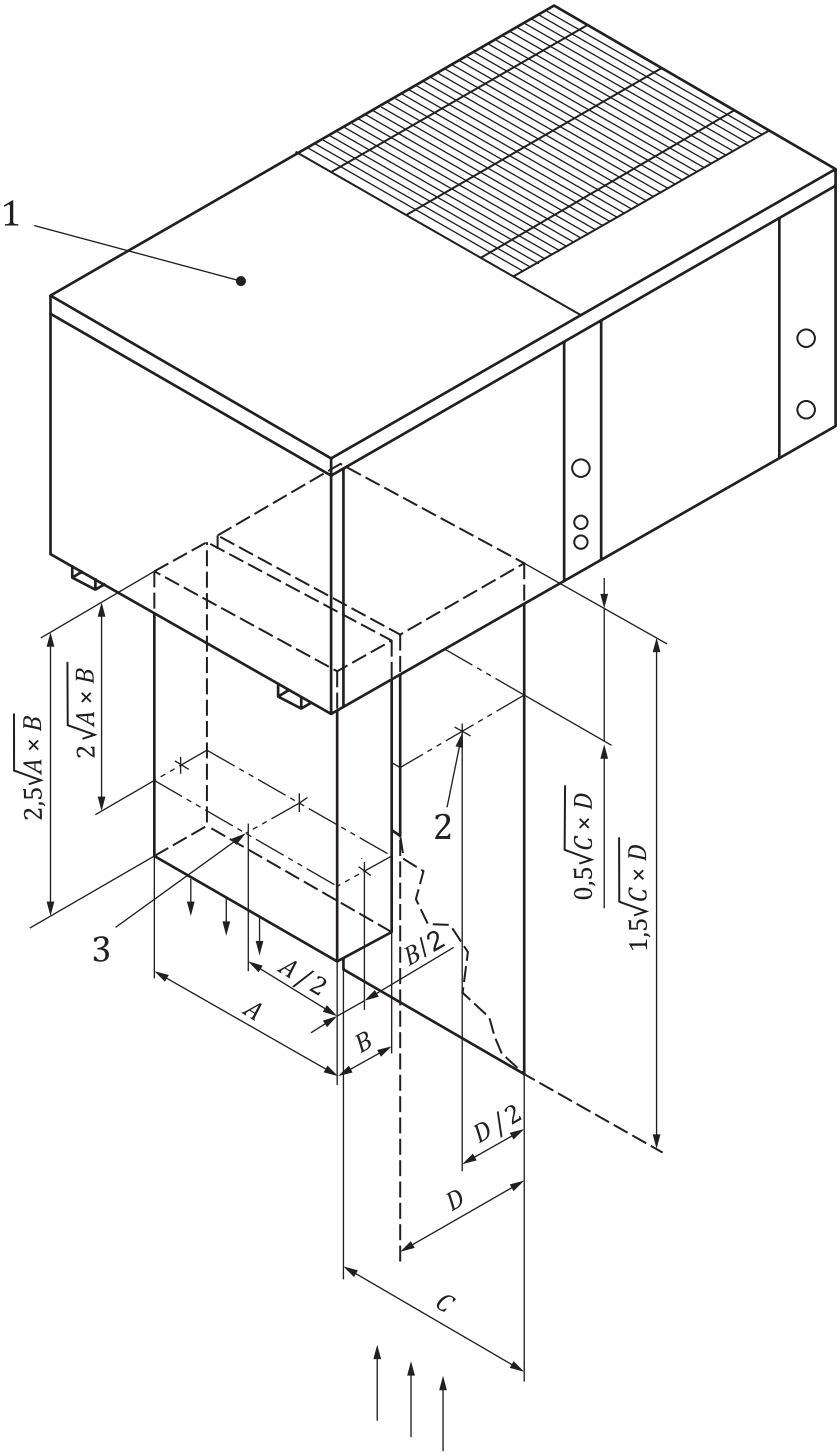

b)

Key

1 equipment under test – single-package unit

2 static pressure tap, inlet (4 required)

3 static pressure tap, outlet (4 required)

NOTE For circular ducts with diameter, d, substitute $\pi d^2/4$ for ($A \times B$) or ($C \times D$).

Figure B.2 — ESP measurements — Single package

© ISO 2017 – All rights reserved

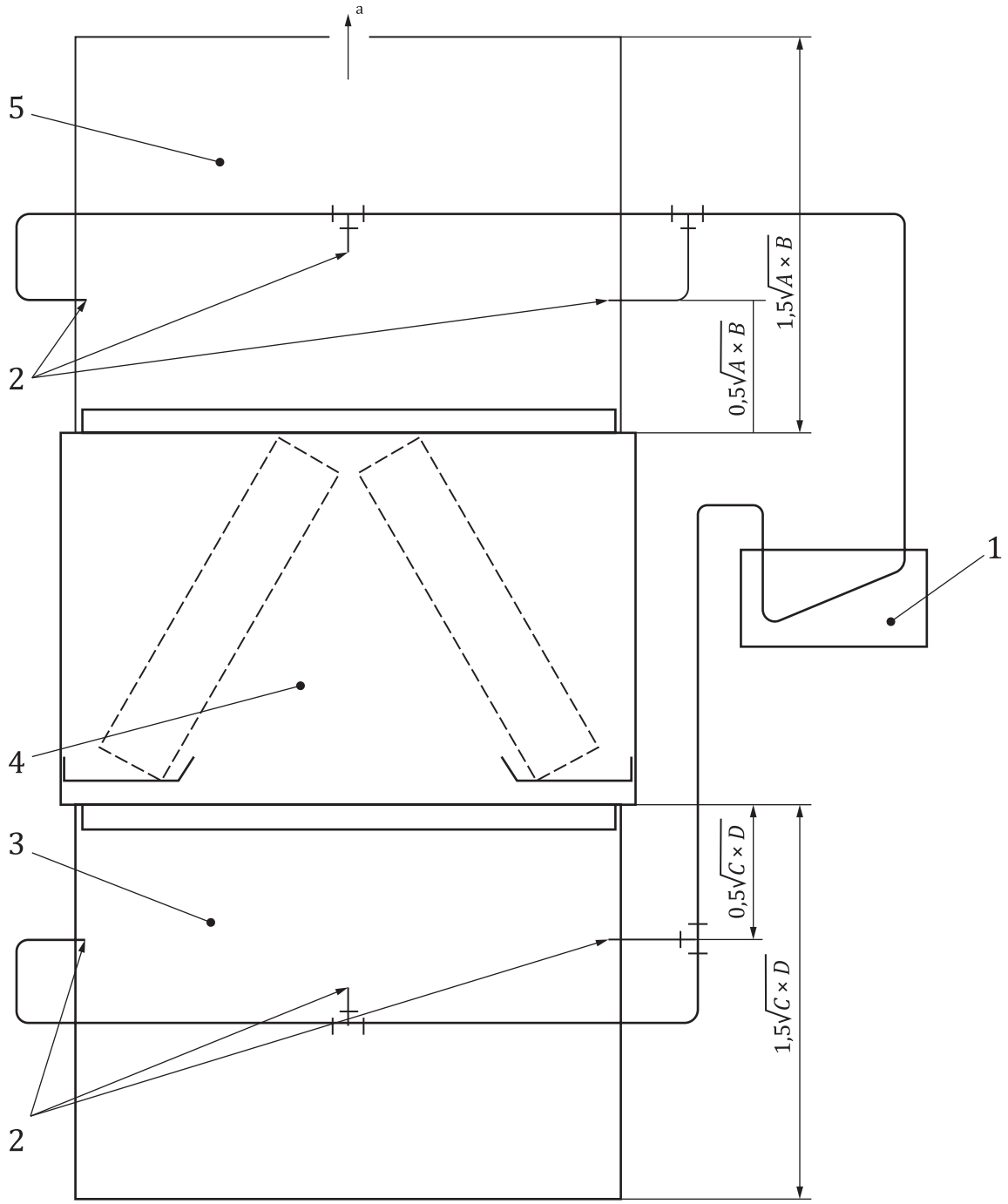

Key

1 manometer
2 outlet pressure taps
3 inlet duct
4 coil section
5 outlet duct
a To airflow measuring apparatus.

NOTE 1 *A* and *B* are outlet dimensions; *C* and *D* are inlet dimensions.

NOTE 2 For circular ducts with diameter *D*, substitute $\pi D_i^2/4$ for ($C \times D$) and $\pi D_o^2/4$ for ($A \times B$), where D_i is inlet duct diameter and D_o is the outlet duct diameter.

© ISO 2017 – All rights reserved

NOTE 3 The length of the inlet duct, $1{,}5\sqrt{C \times D}$, is a minimum dimension. For more precise results, use $4\sqrt{C \times D}$.

Figure B.3 — Air static pressure drop measurement over the coil for a coil-only unit

© ISO 2017 – All rights reserved

Annex C
(informative)

Airflow measurement

C.1 Airflow determination

C.1.1 Airflow should be measured using the apparatus and testing procedures given in this annex.

C.1.2 Airflow quantities are determined as mass flow rates. If airflow quantities are to be expressed for rating purposes in volume flow rates, such ratings should state the conditions (pressure, temperature and humidity) at which the specific volume is determined.

C.2 Airflow and static pressure

The area of a nozzle, A_n, should be determined by measuring its diameter to an accuracy of ±0,2 % in four locations approximately 45° apart around the nozzle in each of two places through the nozzle throat, one at the outlet and the other in the straight section near the radius.

C.3 Nozzle apparatus

C.3.1 **Nozzle apparatus**, consisting of a receiving chamber and a discharge chamber separated by a partition in which one or more nozzles are located (see Figure C.1). Air from the equipment under test is conveyed via a duct to the receiving chamber, where it passes through the nozzle(s) and is then exhausted to the test room or channelled back to the equipment's inlet.

The nozzle apparatus and its connections to the equipment's inlet should be sealed such that air leakage does not exceed 1,0 % of the airflow rate being measured.

© ISO 2017 – All rights reserved

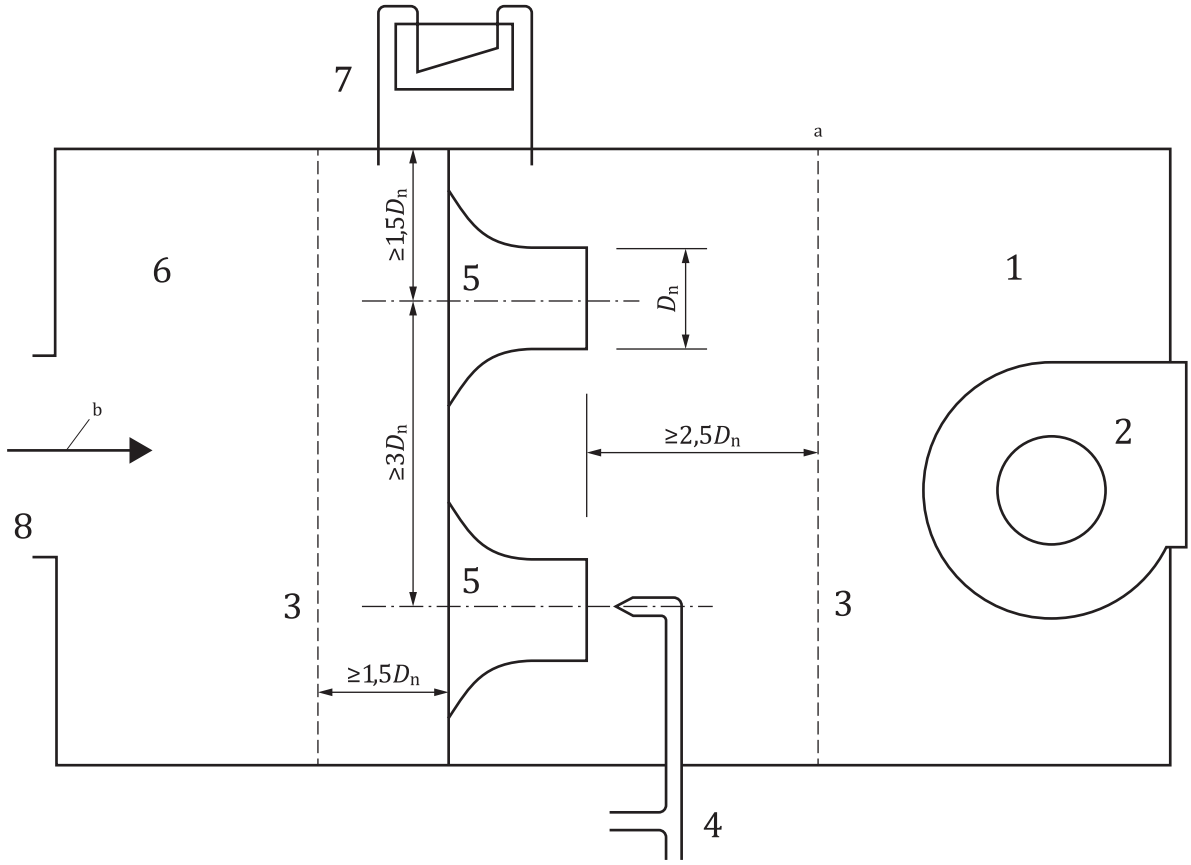

Key

1 discharge chamber
2 exhaust fan
3 diffusion baffle
4 pitot tube (optional)
5 nozzle
6 receiving chamber
7 apparatus for differential pressure measurement
8 adaptor duct (see C.5.1)
D_n nozzle throat diameter
a Diffusion baffles should have uniform perforations, with approximately 40 % of free area.
b Airflow.

Figure C.1 — Airflow measuring apparatus

The centre-to-centre distance between nozzles in use should be not less than three times the throat diameter of the larger nozzle, and the distance from the centre of any nozzle to the nearest discharge- or receiving- chamber side wall should not be less than 1,5 times the nozzle throat diameter.

C.3.2 Diffusers, installed in the receiving chamber (at a distance at least 1,5 times the largest nozzle throat diameter, D_n) upstream of the partition wall and in the discharge chamber (at a distance at least 2,5 times the largest nozzle throat diameter, D_n) downstream of the exit plane of the largest nozzle.

C.3.3 Exhaust fan, capable of providing the desired static pressure at the equipment's outlet. The exhaust fan should be installed in one wall of the discharge chamber and be equipped with a means of varying its capacity.

C.3.4 Manometers, for measuring the static pressure drop across the nozzle(s).

One end of the manometer should be connected to a static pressure tap located flush with the inner wall of the receiving chamber and the other end to a static pressure tap located flush with the inner wall

© ISO 2017 – All rights reserved

of the discharge chamber or, preferably, several taps in each chamber should be connected to several manometers in parallel or manifolded to a single manometer. Static pressure connections should be located so as not to be affected by airflow. Alternatively, the velocity head of the air stream leaving the nozzle(s) may be measured by a Pitot tube as shown in Figure C.1, but when more than one nozzle is in use, the Pitot tube reading should be determined for each nozzle.

C.3.5 Means for determining the air velocity at the nozzle throat.

C.3.5.1 The throat velocity of any nozzle in use should be not less than 15 m/s or more than 35 m/s.

C.3.5.2 Nozzles should be constructed in accordance with Figure C.2 and applied in accordance with the provisions of C.3.5.3 and C.3.5.4.

C.3.5.3 The nozzle discharge coefficient, C_d, for the construction shown in Figure C.2, which has a throat length to throat diameter ratio of 0,6, may be determined using Formula (C.1):

$$C_d = 0{,}998\,6 - \frac{7{,}006}{\sqrt{Re}} + \frac{134{,}6}{Re} \tag{C.1}$$

for Reynolds numbers, *Re*, of 12 000 and above.

The Reynolds number is defined as in Formula (C.2):

$$Re = \frac{v_a D_n}{\nu} \tag{C.2}$$

where

v_a is the airflow velocity at the throat of the nozzle;

D_n is the diameter of the throat of the nozzle;

ν is the kinematic viscosity of air.

© ISO 2017 – All rights reserved

C.3.5.4 Nozzles may also be constructed in accordance with appropriate national standards, provided they can be used in the apparatus described in Figure C.1 and they result in equivalent accuracy.

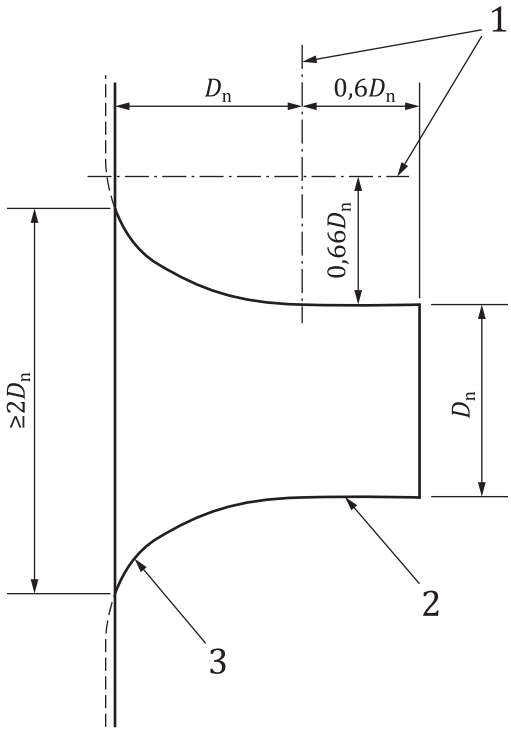

Key

1 axes of ellipse

2 throat section

3 elliptical approach

D_n nozzle throat diameter, in metres

Figure C.2 — Airflow measuring nozzle

C.4 Static pressure measurements

C.4.1 The pressure taps should consist of (6,25 ± 0,25) mm diameter nipples soldered to the outer plenum surfaces and centred over 1 mm diameter holes through the plenum. The edges of these holes should be free of burrs and other surface irregularities.

C.4.2 The plenum and duct section should be sealed to prevent air leakage, particularly at the connections to the equipment and the air measuring device, and should be insulated to prevent heat leakage between the equipment outlet and the temperature-measuring instruments.

C.5 Discharge airflow measurements

C.5.1 The outlet or outlets of the equipment under test should be connected to the receiving chamber by adaptor ducting of negligible air resistance, as shown in Figure C.1.

C.5.2 To measure the static pressure of the receiving chamber, a manometer should have one side connected to one or more static pressure connections located flush with the inner wall of the receiving chamber.

© ISO 2017 – All rights reserved

C.6 Indoor-side airflow measurements

C.6.1 The following readings should be taken:

a) barometric pressure;

b) nozzle dry- and wet-bulb temperatures or dewpoint temperatures;

c) static pressure difference at the nozzle(s) or, optionally, nozzle velocity pressure;

C.6.2 Air mass flow rate, q_m, through a single nozzle is determined using Formula (C.3):

$$q_m = Y \times C_d \times A_n \sqrt{\frac{2p_v}{V'_n}} \quad \text{(C.3)}$$

where p_v is velocity pressure at nozzle throat or static pressure difference across the nozzle.

The expansion factor, Y, is obtained using Formula (C.4):

$$Y = 0{,}452 + 0{,}548\alpha \quad \text{(C.4)}$$

The pressure ratio, α, is obtained using Formula (C.5):

$$\alpha = 1 - \frac{p_v}{p_n} \quad \text{(C.5)}$$

Air volume flow rate, q_V, through a single nozzle is determined using Formula (C.6):

$$q_V = Y \times C_d \times A_n \sqrt{2p_v V'_n} \quad \text{(C.6)}$$

where V'_n is calculated using Formula (C.7):

$$V'_n = \frac{v_n}{1 + W_n} \quad \text{(C.7)}$$

and W_n is the specific humidity at the nozzle inlet.

Air volume flow rate expressed in terms of standard air, q_s, is calculated by Formula (C.8):

$$q_s = \frac{q_v}{1{,}204 v'_n} \quad \text{(C.8)}$$

C.6.3 Airflow through multiple nozzles may be calculated in accordance with C.6.2, except that the total flow rate is then the sum of the q_m or q_V values for each nozzle used.

C.7 Ventilation, exhaust and leakage airflow measurements — Calorimeter test method

C.7.1 Ventilation, exhaust and leakage airflows should be measured using apparatus similar to that illustrated in Figure C.3 with the refrigeration system in operation and after condensate equilibrium has been obtained.

C.7.2 With the equalizing device adjusted for a maximum static pressure differential between the indoor-side and outdoor-side test chambers of 1 Pa, the following readings should be taken:

a) barometric pressure;

 © ISO 2017 – All rights reserved

b) nozzle wet- and dry-bulb temperatures;

c) nozzle velocity pressure.

C.7.3 Airflow values should be calculated in accordance with C.6.2.

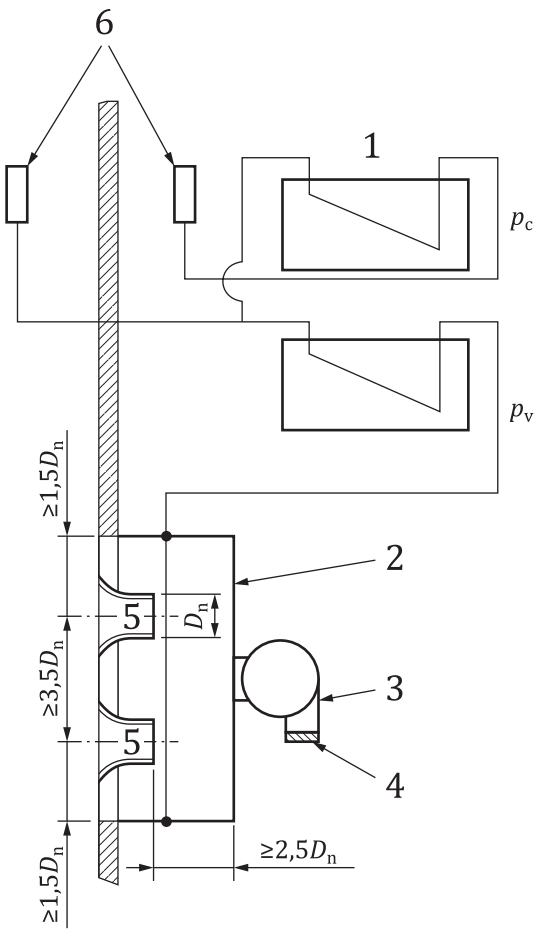

Key

1 pressure manometers
2 discharge chamber
3 exhaust fan
4 damper
5 nozzle
6 pick-up tube

D_n nozzle throat diameter, in metres
p_c test chamber equalization pressure
p_v nozzle velocity pressure

Figure C.3 — Pressure-equalizing device

© ISO 2017 – All rights reserved

Annex D
(normative)

Calorimeter test method

D.1 General

D.1.1 The calorimeter provides a method for determining capacity simultaneously on both the indoor-side and the outdoor-side. In the cooling mode, the indoor-side capacity determination should be made by balancing the cooling and dehumidifying effects with measured heat and water inputs. The outdoor-side capacity provides a conformative test of the cooling and dehumidifying effect by balancing the heat and water rejection on the condenser side with a measured amount of cooling.

D.1.2 The two calorimeter test chambers, indoor-side and outdoor-side, are separated by an insulated partition having an opening into which the non-ducted, single-packaged equipment is mounted. The equipment should be installed in a manner similar to a normal installation. No effort should be made to seal the internal construction of the equipment to prevent air leakage from the condenser side to the evaporator side or vice versa. No connections or alterations should be made to the equipment which might in any way alter its normal operation.

D.1.3 A pressure-equalizing device, as illustrated in Figure C.3, should be provided in the partition wall between the indoor-side and the outdoor-side test chambers to maintain a balanced pressure between these test chambers and also to permit measurement of leakage, exhaust and ventilation air. This device consists of one or more nozzles of the type shown in Figure C.2, a discharge chamber equipped with an exhaust fan and manometers for measuring test chamber and airflow pressures.

Since the airflow from one test chamber to the other may be in either direction, two such devices mounted in opposite directions or a reversible device should be used. The manometer pressure pick-up tubes should be so located as to be unaffected by air discharged from the equipment or by the exhaust from the pressure-equalizing device. The fan or blower which exhausts air from the discharge chamber, should permit variation of its airflow by any suitable means, such as a variable speed drive or a damper as shown in Figure C.3. The exhaust from this fan or blower should be such that it does not affect the inlet air to the equipment.

The pressure equalizing device should be adjusted during calorimeter tests or airflow measurements so that the static pressure difference between the indoor-side and outdoor-side test chambers is not greater than 1,25 Pa.

D.1.4 The size of the calorimeter should be sufficient to avoid any restriction to the intake or discharge openings of the equipment. Perforated plates or other suitable grilles should be provided at the discharge opening from the reconditioning equipment to avoid face velocities exceeding 0,5 m/s. Sufficient space should be allowed in front of any inlet or discharge grilles of the equipment to avoid interference with the airflow. The minimum distance from the equipment to side walls or ceiling of the test chamber(s) should be 1 m, except for the back of console-type equipment, which should be in normal relation to the wall. Ceiling-mounted equipment should be installed at a minimum distance of 1,8 m from the floor. Table D.1

 © ISO 2017 – All rights reserved

gives the suggested dimensions for the calorimeter. To accommodate peculiar sizes of equipment it may be necessary to alter the suggested dimensions to comply with the space requirements.

Table D.1 — Sizes of calorimeter

Rated cooling capacity of equipment[a] W	Suggested minimum inside dimensions of each room of the calorimeter m		
	Width	Height	Length
3 000	2,4	2,1	1,8
6 000	2,4	2,1	2,4
9 000	2,7	2,4	3,0
12 000[b]	3,0	2,4	3,7

[a] All figures are round numbers.

[b] Larger capacity equipment will require larger calorimeters.

D.1.5 Each test chamber should be provided with reconditioning equipment to maintain specified airflow and prescribed conditions. Reconditioning apparatus for the indoor-side test chamber should consist of heaters to supply sensible heat and a humidifier to supply moisture. Reconditioning apparatus for the outdoor-side test chamber should provide cooling, dehumidification and humidification. The energy supply should be controlled and measured.

D.1.6 When calorimeters are used for heat pumps, they should have heating, humidifying and cooling capabilities for both rooms (see Figures D.1 and D.2). Other means, such as rotating the equipment, may be used as long as the rating conditions are maintained.

D.1.7 Reconditioning apparatus for both test chambers should be provided with fans of sufficient capacity to ensure airflows of not less than twice the quantity of air discharged by the equipment under test in the calorimeter. The calorimeter should be equipped with means of measuring or determining specified wet- and dry-bulb temperatures in both calorimeter test chambers.

D.1.8 It is recognized that in both the indoor-side and outdoor-side test chambers, temperature gradients and airflow patterns result from the interaction of the reconditioning apparatus and test equipment. Therefore, the resultant conditions are peculiar to, and dependent on, a given combination of test chamber size, arrangement and size of reconditioning apparatus and the air discharge characteristics of the equipment under test.

The point of measurement of specified test temperatures, both wet- and dry-bulb, should be such that the following conditions are fulfilled.

a) The measured temperatures should be representative of the temperature surrounding the equipment and should simulate the conditions encountered in an actual application for both indoor and outdoor-sides, as indicated above.

b) At the point of measurement, the temperature of air should not be affected by air discharged from any piece of the equipment. This makes it mandatory that the temperatures are measured upstream of any recirculation produced by the equipment.

c) Air sampling tubes should be positioned on the intake side of the equipment under test.

d) When testing multi-split air conditioners and heat pumps, temperature of air entering all indoor units or an outdoor unit shall be within 0,5 K of the average.

D.1.9 During a heating capacity test, the temperature of the air leaving the indoor-side of the heat pump shall be monitored to determine if its heating performance is being affected by a build-up of ice

© ISO 2017 – All rights reserved

on the outdoor-side heat exchanger. A single temperature-measuring device, placed at the centre of the indoor-air outlet, is sufficient to indicate any change in the indoor-air discharge temperature caused by a build-up of ice on the outdoor-side heat exchanger.

D.1.10 Interior surfaces of the calorimeter test chambers should be of non-porous material with all joints sealed against air and moisture leakage. The access door should be tightly sealed against air and moisture leakage by use of gaskets or other suitable means.

D.1.11 If defrost controls on the heat pump provide for stopping the indoor airflow, provisions shall be made to stop the test apparatus airflow to the equipment on both the indoor and outdoor-sides during such a defrost period. If it is desirable to maintain operation of the reconditioning apparatus during the defrost period, provisions may be made to bypass the conditioned air around the equipment as long as assurance is provided that the conditioned air does not aid in the defrosting. A watt-hour meter shall be used for obtaining the integrated electrical input to the equipment under test.

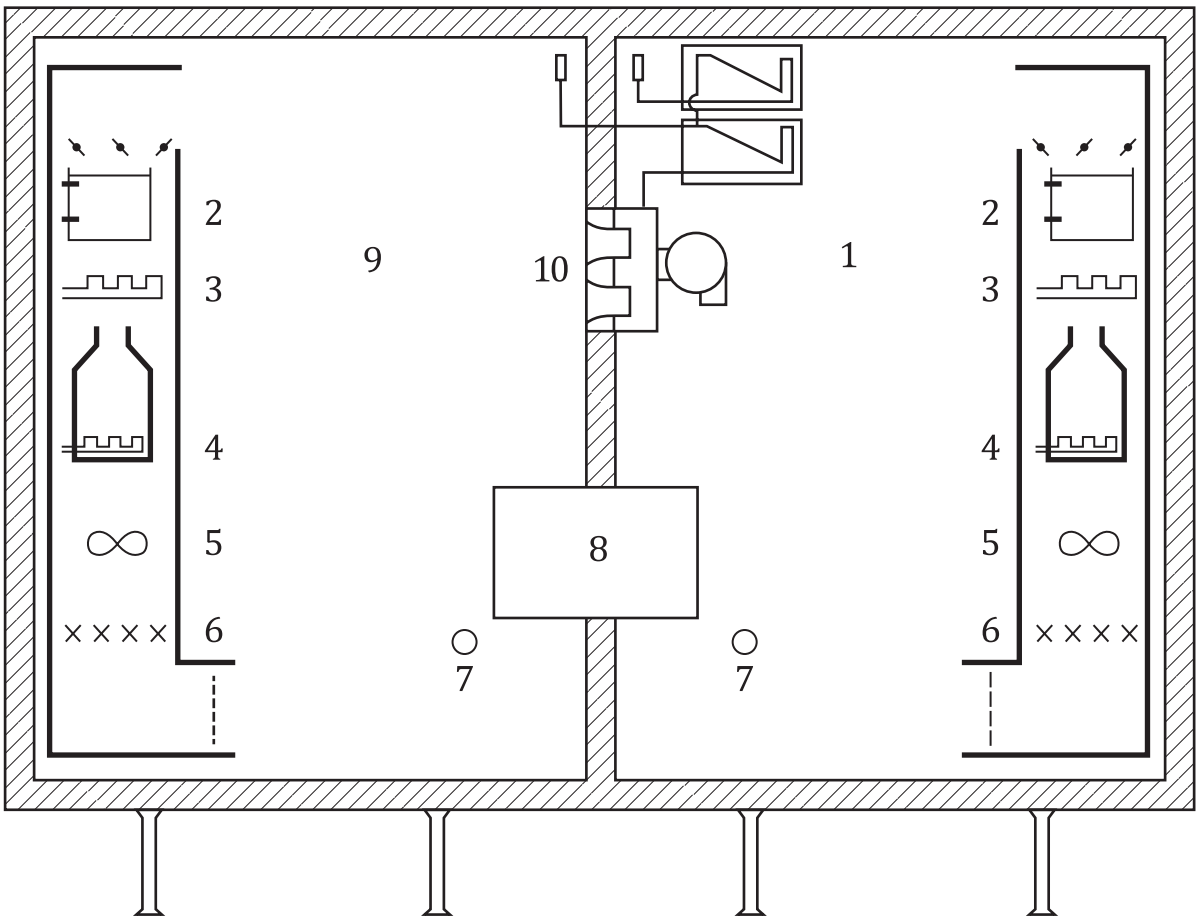

Key

1 outdoor-side test chamber
2 cooling coil
3 heating coil
4 humidifier
5 fan
6 mixer
7 air sampling tube
8 equipment under test
9 indoor-side test chamber
10 pressure-equalization device

Figure D.1 — Typical calibrated room-type calorimeter

© ISO 2017 – All rights reserved

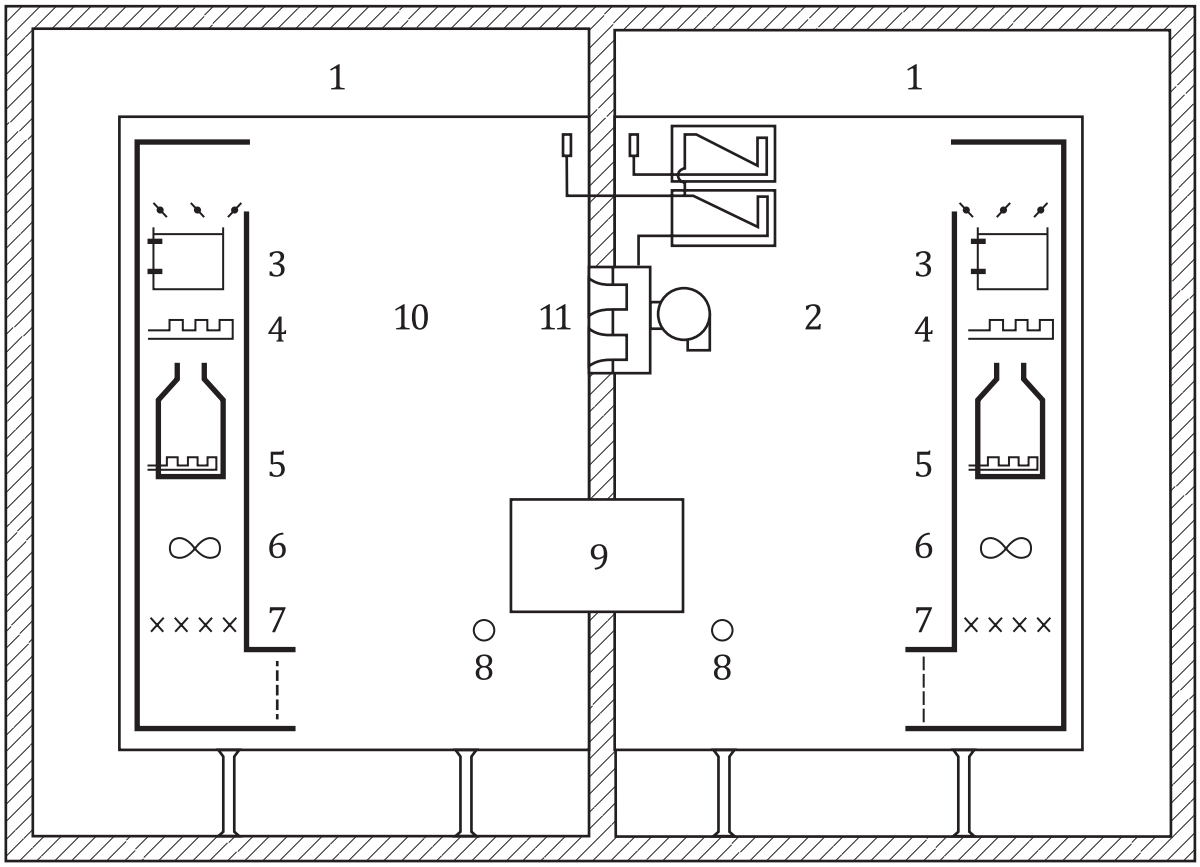

Key

1 controlled-temperature air space
2 outdoor-side test chamber
3 cooling coil
4 heating coil
5 humidifier
6 fan
7 mixer
8 air sampling tube
9 equipment under test
10 indoor-side test chamber
11 pressure-equalization device

Figure D.2 — Typical balanced ambient room-type calorimeter

D.2 Calibrated room-type calorimeter

D.2.1 Heat leakage may be determined in either the indoor-side or outdoor-side test chamber by the following method: All openings should be closed. Either test chamber may be heated by electric heaters to a temperature of at least 11 °C above the surrounding ambient temperature. The ambient temperature should be maintained constant to within ±1 K outside all six enveloping surfaces of the test chamber, including the separating partition. If the construction of the partition is identical to that of the other walls, the heat leakage through the partition may be determined on a proportional area basis.

D.2.2 For calibrating the heat leakage through the separating partition alone, the following procedure may be used: A test is carried out as described in D.2.1. Then, the temperature of the adjoining area on the other side of the separating partition is raised to equal the temperature in the heated test chamber, thus eliminating heat leakage through the partition, while the 11 °C differential is maintained between the heated test chamber and the ambient air surrounding the other five enveloping surfaces.

The difference in heat input between the first test and the second test will permit determination of the leakage through the partition alone.

© ISO 2017 – All rights reserved

D.2.3 For the outdoor-side test chamber equipped with a means of cooling, an alternative means of calibration may be to cool the test chamber to a temperature of at least 11 °C below the ambient temperature (on six sides) and carry out a similar analysis.

D.2.4 In addition to the two-room simultaneous method of determining capacities, the performance of the indoor-side test chamber may be verified at least every six months using an industry-standard cooling-capacity calibrating device. A calibrating device may also be another piece of equipment whose performance has been measured by the simultaneous indoor and outdoor measurement method at an accredited national test laboratory as part of an industry-wide cooling-capacity verification programme.

The indoor-side calorimeter including the central partition and the outdoor-side calorimeter shall be insulated so that heat leakage (including radiation) does not exceed 5 % of the equipment capacity. Space where enough air circulation is available shall be secured under the floor of the room-type calorimeter.

D.3 Balanced ambient room-type calorimeter

D.3.1 The balanced ambient room-type calorimeter is shown in Figure D.2 and is based on the principle of maintaining the dry-bulb temperatures surrounding the particular test chamber equal to the dry-bulb temperatures maintained within that test chamber. If the ambient wet-bulb temperature is also maintained equal to that within the test chamber, the vapour-proofing provisions of D.1.10 are not required.

D.3.2 The floor, ceiling and walls of the calorimeter test chambers shall be spaced at sufficient distance from the floor, ceiling and walls of the controlled areas in which the test chambers are located in order to provide a uniform air temperature in the intervening space. It is recommended that this distance be at least 0,3 m. Means shall be provided to circulate the air within the surrounding space to prevent stratification.

D.3.3 Heat leakage through the separating partition shall be introduced into the heat balance calculation and may be calibrated in accordance with D.2.2 or may be calculated.

D.3.4 It is recommended that the floor, ceiling and walls of the calorimeter test chambers be insulated so as to limit heat leakage (including radiation) to no more than 10 % of the test equipment's capacity, with an 11 °C temperature difference, or 300 W for the same temperature difference, whichever is the greater, as tested using the procedure given in D.2.2.

© ISO 2017 – All rights reserved

D.4 Calculation of cooling capacity

D.4.1 The energy flow quantities used to calculate the total cooling capacity based on indoor-side and outdoor-side measurements are shown in Figure D.3.

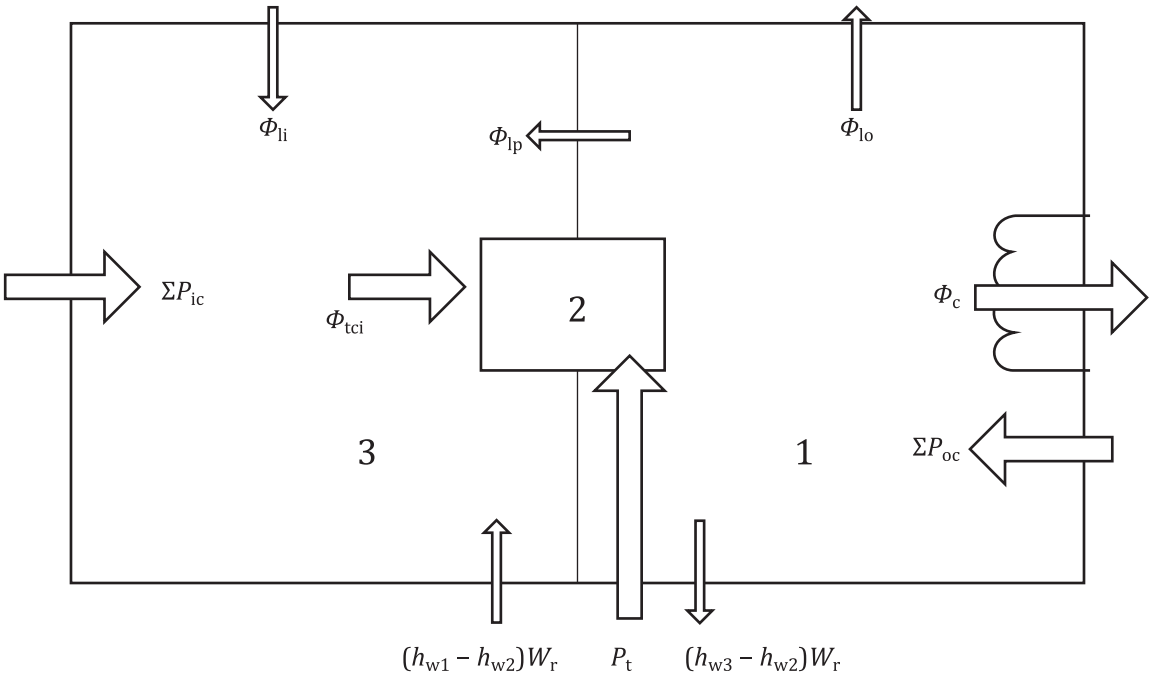

Key

1 outdoor-side test chamber

2 equipment under test

3 indoor-side test chamber

NOTE Values for the variables identified in the figure are calculated using Formulae (D.1) to (D.5).

Figure D.3 — Calorimeter energy flows during cooling capacity tests

D.4.2 The total cooling capacity on the indoor-side, ϕ_{tci}, as tested in either the calibrated or balanced ambient room-type calorimeter (see Figures D.1 and D.2), is calculated using Formula (D.1):

$$\phi_{tci} = \Sigma P_{ic} + (h_{w1} - h_{w2})W_r + \phi_{lp} + \phi_{li} \quad \text{(D.1)}$$

NOTE If no water is introduced during the test, h_{w1} is taken at the temperature of the water in the humidifier tank of the conditioning apparatus.

When a cooling coil of the indoor-side calorimeter is used for testing of small capacity units, in order to stabilize the test condition, Formula (D.2) shall be used and requirements for uncertainties of measurements specified in 8.2.2 shall be satisfied. ϕ_{ci} in Formula (D.2) is the amount of heat exchanged in the cooling coil of the indoor-side calorimeter.

$$\phi_{tci} = \Sigma P_{ic} + (h_{w1} - h_{w2})W_r + \phi_{lp} + \phi_{li} - \phi_{ci} \quad \text{(D.2)}$$

D.4.3 When it is not practical to measure the temperature of the air leaving the indoor-side test chamber and entering the outdoor-side test chamber, the temperature of the condensate may be assumed to be at the measured or estimated wet-bulb temperature of the air leaving the test equipment.

© ISO 2017 – All rights reserved

D.4.4 The water vapour condensed by the equipment under test, W_r, may be determined by the amount of water evaporated into the indoor-side test chamber by the reconditioning equipment to maintain the required humidity.

D.4.5 Heat leakage, ϕ_{lp}, into the indoor-side test chamber through the separating partition between the indoor-side and outdoor-side test chambers may be determined from the calibrating test or, in the case of the balanced ambient room-type test chamber, may be based on calculations.

D.4.6 The total cooling capacity on the outdoor-side, ϕ_{tco}, as tested in either the calibrated or balanced ambient room-type calorimeter (see Figures D.1 and D.2) is calculated using Formula (D.3):

$$\phi_{tco} = \phi_c - \Sigma P_{oc} - P_t + \left(h_{w3} - h_{w2}\right) W_r + \phi_{lp} + \phi_{lo} \quad \text{(D.3)}$$

NOTE The h_{w3} enthalpy is taken at the temperature at which the condensate leaves the outdoor-side test chamber of the reconditioning apparatus.

D.4.7 The heat leakage rate into the indoor-side test chamber through the separating partition, ϕ_{lp}, between the indoor-side and outdoor-side test chambers may be determined from the calibrating test or, in the case of the balanced ambient room-type test chamber, may be based on calculations.

NOTE This quantity is numerically equal to that used in Formula (D.1) if, and only if, the area of the separating partition exposed to the outdoor-side is equal to the area exposed to the indoor-side test chamber.

D.4.8 The latent cooling capacity (room dehumidifying capacity), ϕ_d, is calculated using Formula (D.4):

$$\phi_d = K_1 W_r \quad \text{(D.4)}$$

D.4.9 The sensible cooling capacity, ϕ_{sci}, is calculated using Formula (D.5):

$$\phi_{sci} = \phi_{tci} - \phi_d \quad \text{(D.5)}$$

D.4.10 Sensible heat ratio (SHR) is calculated using Formula (D.6):

$$\text{SHR} = \frac{\phi_{sci}}{\phi_{tci}} \quad \text{(D.6)}$$

© ISO 2017 – All rights reserved

D.5 Calculation of heating capacity

D.5.1 The energy flow quantities used to calculate the total heating capacity based on indoor-side and outdoor-side measurements are shown in Figure D.4.

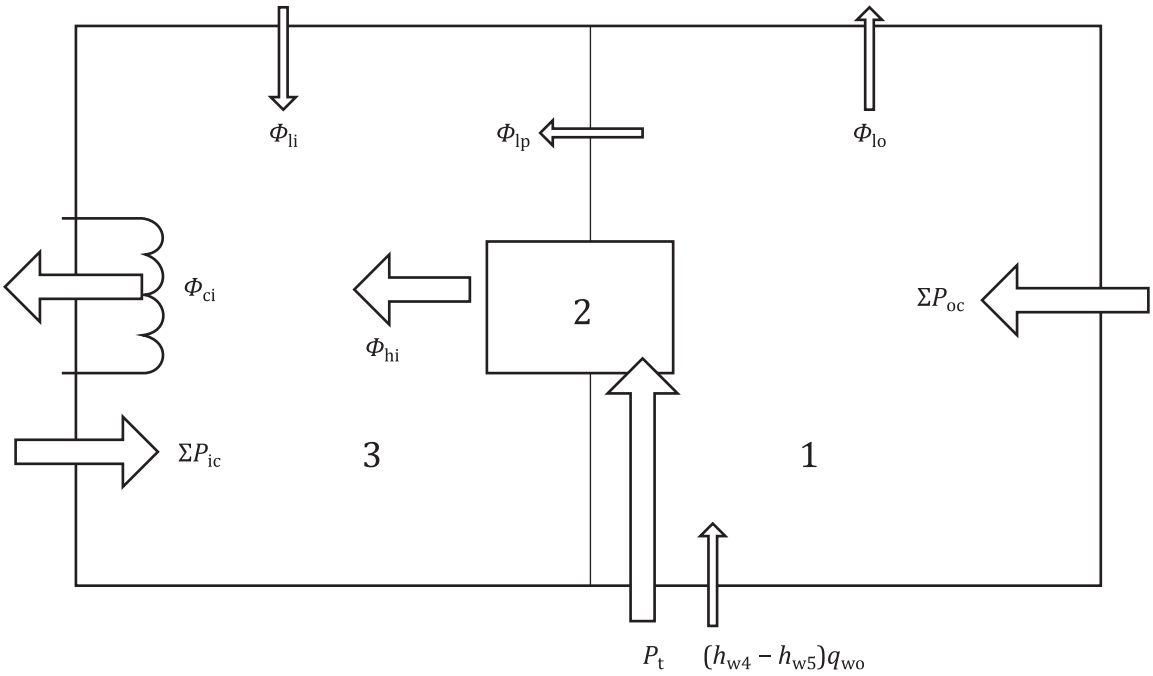

Key

1 outdoor-side test chamber

2 equipment under test

3 indoor-side test chamber

NOTE Values for the variables identified in this figure are calculated using Formulae (D.7) and (D.8).

Figure D.4 — Calorimeter energy flows during heating capacity tests

D.5.2 Determination of the indoor-side heating capacity by measurement in the indoor-side test chamber of the calorimeter, ϕ_{hi}, is calculated using Formula (D.7):

$$\phi_{hi} = \phi_{ci} - \Sigma P_{ic} - \phi_{lp} - \phi_{li} \tag{D.7}$$

NOTE ΣP_{ic} is the other power input to the indoor-side test chamber (e.g. illumination, electrical and thermal power input to the compensating device, heat balance of the humidification device), in watts.

D.5.3 Determination of the heating capacity by measurement of the heat-absorbing side, ϕ_{ho}, is calculated for equipment where the evaporator takes the heat from an airflow using Formula (D.8):

$$\phi_{ho} = \Sigma P_{oc} + P_t + (h_{w4} - h_{w5}) q_{wo} - \phi_{lp} - \phi_{lo} \tag{D.8}$$

© ISO 2017 – All rights reserved

Annex E
(normative)

Indoor air enthalpy test method

E.1 General

In the air enthalpy method, capacities are determined from measurements of entering and leaving wet- and dry-bulb temperatures and the associated airflow rate.

E.2 Application

E.2.1 Air leaving the equipment under the test shall lead directly to the discharge chamber. If a direct connection cannot be made between the equipment and the discharge chamber, a short plenum shall be attached to the equipment. In this case, the short plenum shall have the same size as the discharge opening of the equipment or shall be constructed so as not to prevent the leaving air from expanding. The cross-sectional area of the airflow channel through the discharge chamber shall be such that the average air velocity is less than 1,25 m/s against the airflow rate of the equipment under test. The static pressure difference between the discharge chamber and the intake opening of the equipment under test shall be zero. An example of the discharge chamber test setup is shown in Figure E.1.

E.2.2 Airflow measurements shall be made in accordance with the provisions specified in Annex C.

NOTE Additional guidance can be found in ISO 3966 and ISO 5167-1, as appropriate, and in the provisions of this annex.

E.2.3 When conducting cooling or steady-state heating capacity tests using the indoor air enthalpy test method, the additional test tolerances given in Table E.1 shall apply.

Table E.1 — Variations allowed during steady-state cooling and heating capacity tests that only apply when using the indoor air enthalpy method

Reading	Variation of arithmetical mean values from specified test conditions		Variation of individual readings from specified test conditions	
	≤100 Pa	>100 Pa	≤100 Pa	>100 Pa
External static pressure (ESP)	±0,5 Pa	±5 %	±0,10 Pa	±10 %
NOTE The test condition is defined as the measured arithmetical mean of static pressure taken within the first 5 min of the data collection period.				

© ISO 2017 – All rights reserved

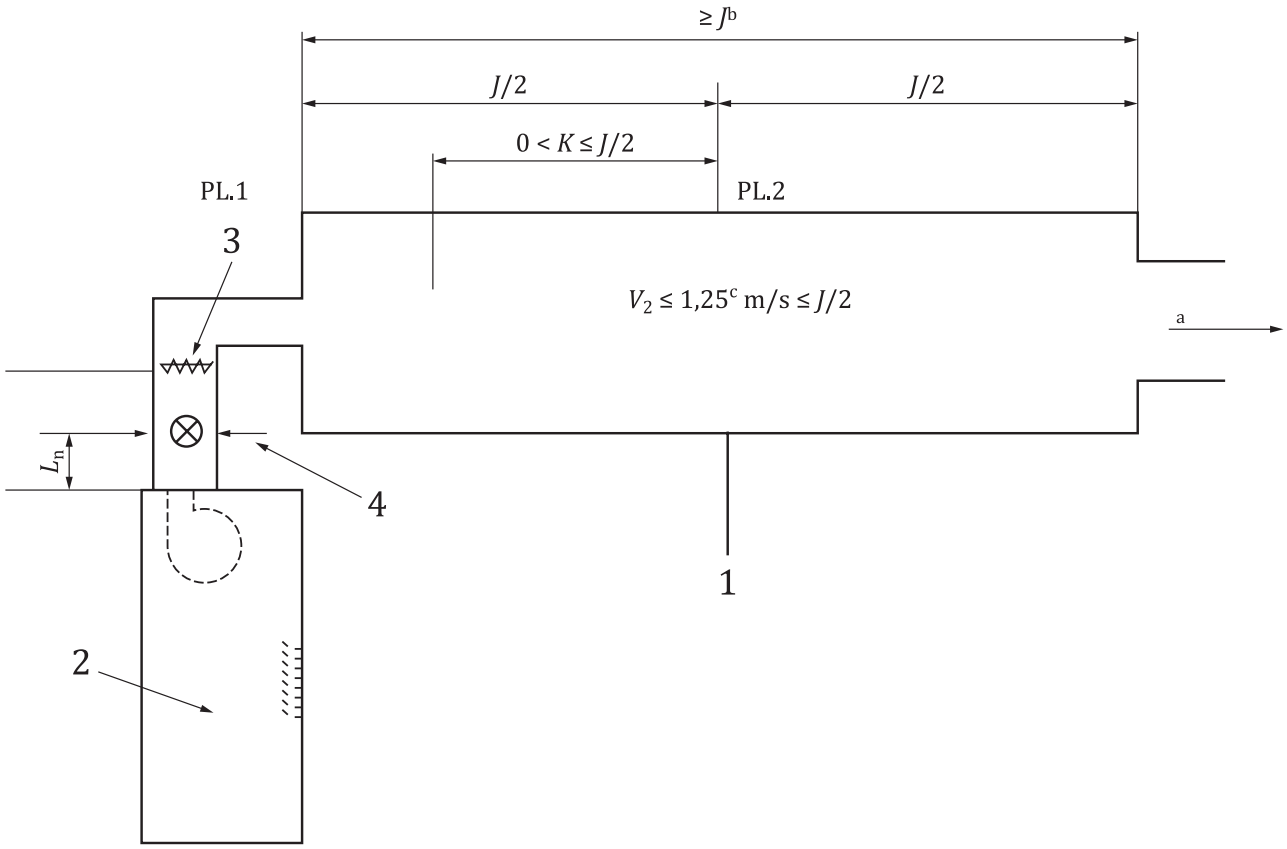

Key

1 static pressure tappings

2 equipment under test

3 damper for Fixed duct resistance method

4 external static pressure

a To air sampler and airflow measuring apparatus.

b $J = 2De$, where $De = \sqrt{4AB/\pi}$ and A and B are dimensions of the equipment's outlet.

c V_2 is the average air velocity at PL.2.

Figure E.1 — Discharge chamber requirements for Fixed duct resistance method when using the indoor air enthalpy test method

E.2.4 When conducting transient heating capacity tests using the indoor air enthalpy test method, the additional test tolerances given in Table 8 shall apply.

When testing multi-split air conditioners and heat pumps, temperature of air entering all indoor units or an outdoor unit shall be within 0,5 K of the average.

© ISO 2017 – All rights reserved

E.3 Calculation of cooling capacity

The total capacity based on the indoor-side test data, ϕ_{tci}, shall be calculated using Formula (E.1):

$$\phi_{tci} = \frac{q_{V,i}\left(h_{a1} - h_{a2}\right)}{V_n} = \frac{q_{V,i}\left(h_{a1} - h_{a2}\right)}{V'_n\left(1 + W_n\right)} \tag{E.1}$$

The sensible cooling capacity based on the indoor-side test data ϕ_{sci}, shall be calculated using Formula (E.2):

$$\phi_{sci} = \frac{q_{V,i}\left(c_{pa1}t_{a1} - c_{pa2}t_{a2}\right)}{V_n} = \frac{q_{V,i}\left(c_{pa1}t_{a1} - c_{pa2}t_{a2}\right)}{V'_n\left(1 + W_n\right)} \tag{E.2}$$

The latent cooling capacity based on the indoor-side test data, ϕ_d, shall be calculated using Formula (E.3) or (E.4):

$$\phi_d = \frac{K_1 q_{V,i}\left(W_{i1} - W_{i2}\right)}{V_n} = \frac{K_1 q_{V,i}\left(W_{i1} - W_{i2}\right)}{V'_n\left(1 + W_n\right)} \tag{E.3}$$

$$\phi_d = \phi_{tci} - \phi_{sci} \tag{E.4}$$

E.4 Calculation of heating capacity

Total heating capacity based on indoor-side data, ϕ_{thi}, shall be calculated using Formula (E.5):

$$\phi_{thi} = \frac{q_{V,i}\left(c_{pa2}t_{a2} - c_{pa1}t_{a1}\right)}{V_n} = \frac{q_{V,i}\left(c_{pa2}t_{a2} - c_{pa1}t_{a1}\right)}{V'_n\left(1 + W_n\right)} \tag{E.5}$$

NOTE C_{pa1} can be equal to C_{pa2}.

Formulae (E.1), (E.2), (E.3) and (E.5) do not provide allowance for heat leakage in the test duct and the discharge chamber. It is recommended to include correction for heat loss from receiving chamber and/or connecting ducts.

E.5 Airflow enthalpy measurements

E.5.1 General

The following test apparatus arrangements are recommended.

E.5.2 Tunnel air enthalpy method

The equipment to be tested is typically located in a test room or rooms. An air measuring device is attached to the equipment air discharge (indoor, outdoor or both, as applicable). This device discharges directly into the test room or space, which is provided with suitable means for maintaining the air entering the equipment at the desired wet- and dry-bulb temperatures (see Figure E.2). Suitable means for measuring the wet- and dry-bulb temperatures of the air entering and leaving the equipment and the external resistance shall be provided.

© ISO 2017 – All rights reserved

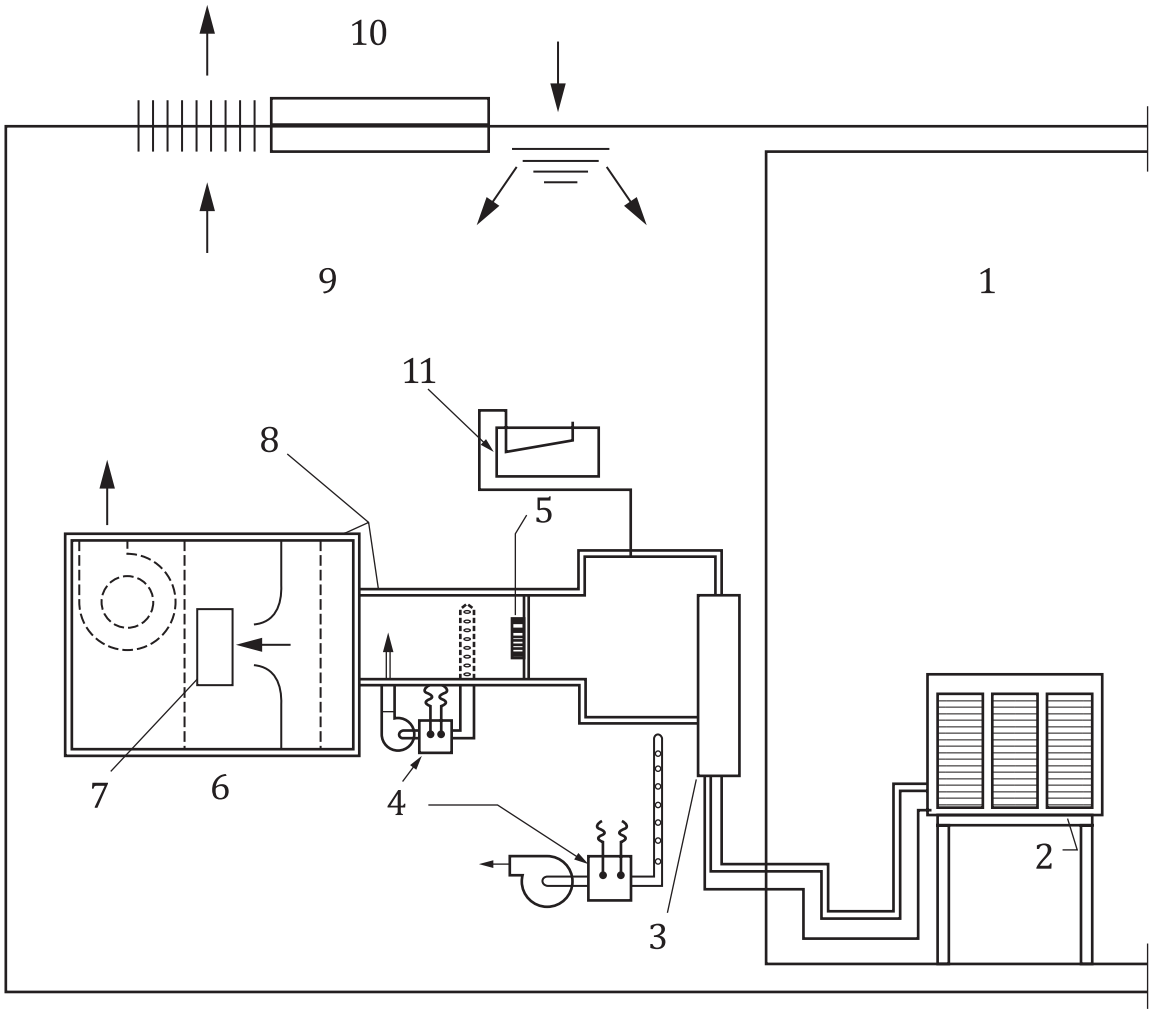

Key

1 outdoor-side test room
2 outdoor unit of equipment under test
3 indoor-side coil section of equipment under test
4 air temperature and humidity measuring instruments
5 mixer
6 airflow measuring apparatus
7 door/window
8 insulation
9 indoor-side test room
10 room conditioning apparatus
11 apparatus for differential pressure measurement

Figure E.2 — Tunnel air enthalpy test method arrangement

E.5.3 Loop air enthalpy method

This arrangement differs from the tunnel arrangement in that the air measuring device discharge is connected to suitable reconditioning equipment which is, in turn, connected to the equipment inlet (see Figure E.3). The resulting test "loop" shall be sealed so that air leakage at places that would influence capacity measurements does not exceed 1,0 % of the test airflow rate. The dry-bulb temperature of the air surrounding the equipment shall be maintained at within ±3,0 K of the desired test inlet dry-bulb temperature. Wet- and dry-bulb temperatures and external resistance are to be measured by suitable means.

© ISO 2017 – All rights reserved

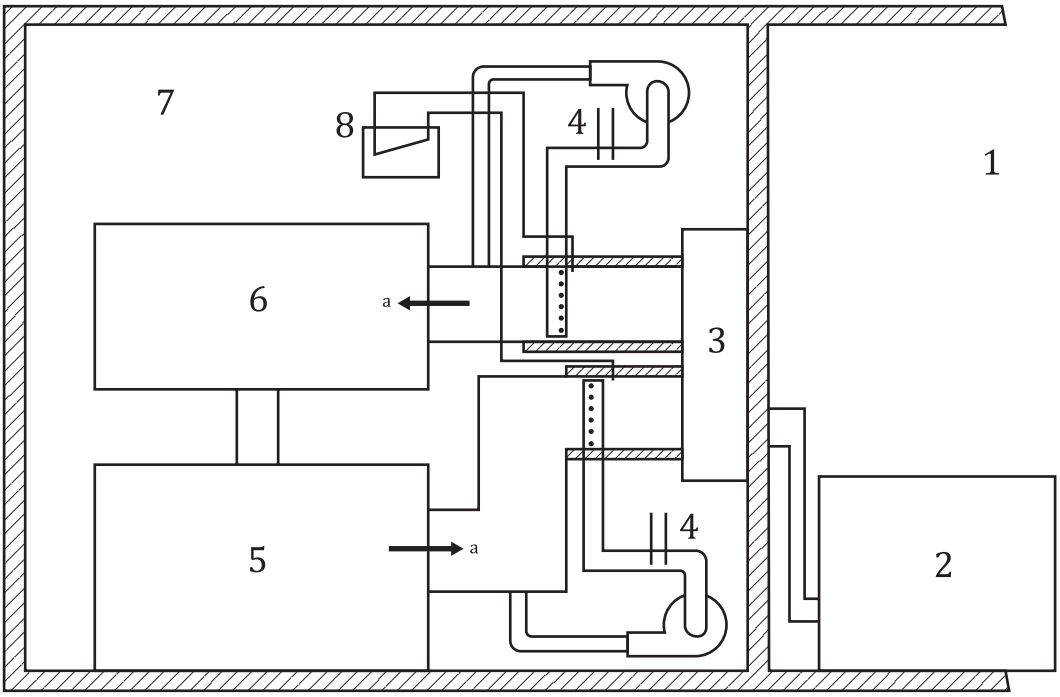

Key

1 outdoor-side test room
2 outdoor unit of equipment under test
3 indoor unit of equipment under test
4 temperature and humidity measuring instruments
5 reconditioning apparatus
6 airflow measuring apparatus
7 indoor-side test room
8 apparatus for differential pressure measurement
a Airflow.

Figure E.3 — Loop air enthalpy test method arrangement

E.5.4 Calorimeter air enthalpy method

For equipment in which the compressor is ventilated independently of the indoor air stream, the calorimeter air enthalpy method arrangement shall be employed to take into account compressor heat radiation (see Figure E.4). In this arrangement, an enclosure is placed over the equipment under test or the applicable part thereof. This enclosure may be constructed of any suitable material, but shall be non-hydroscopic, airtight and preferably insulated. It shall be large enough to permit inlet air to circulate freely between the equipment and the enclosures, and in no case shall the enclosure be closer than 150 mm to any part of the equipment. The inlet to the enclosure shall be remotely located from the equipment's inlet so as to cause circulation throughout the entire enclosed space. An air-measuring device is to be connected to the equipment's discharge. This device shall be well insulated where it passes through the enclosed space. Wet- and dry-bulb temperatures of the air entering the equipment are to be measured at the enclosure inlet. Temperature and external resistance measurements shall be carried out by suitable means.

 © ISO 2017 – All rights reserved

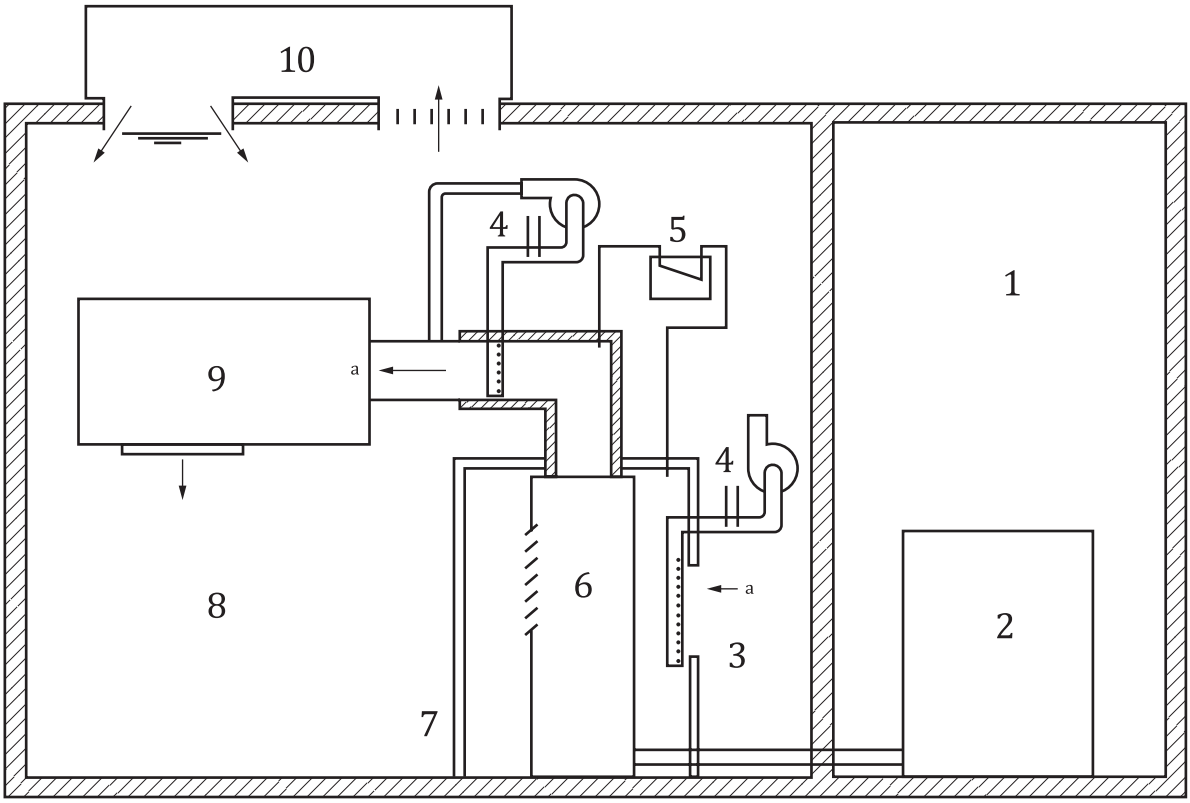

Key

1 outdoor-side test room
2 outdoor unit of equipment under test
3 air inlet
4 air temperature and humidity measuring instruments
5 apparatus for differential pressure measurement
6 indoor-side coil section of equipment under test
7 enclosure
8 indoor-side test room
9 airflow measuring apparatus
10 room conditioning apparatus
a Airflow.

Figure E.4 — Calorimeter air enthalpy test method arrangement

© ISO 2017 – All rights reserved

Annex F
(informative)

Refrigerant enthalpy test method

F.1 General

F.1.1 In this test method, capacity is determined from the refrigerant enthalpy change and flow-rate. Enthalpy changes are determined from measurements of entering and leaving pressures and temperatures of the refrigerant, and the flow-rate is determined by a suitable flow meter in the liquid line.

F.1.2 This method may be used for tests of equipment in which the refrigerant charge is not critical and where normal installation procedures involve the field connection of refrigerant lines.

F.1.3 This method should be used neither for tests in which the refrigerant liquid leaving the flow meter is sub-cooled less than 2,0 °C nor for tests in which the superheat of the vapour leaving the indoor-side is less than 3,0 °C.

F.1.4 Cooling and heating capacities obtained by the refrigerant enthalpy method should include the thermal effects of the fan.

F.2 Refrigerant flow method

F.2.1 The refrigerant flow-rate should be measured with an integrating-type flow meter connected in the liquid line upstream of the refrigerant control device. This meter should be sized such that its pressure drop does not exceed the vapour pressure change that a 2,0 °C temperature change would produce.

F.2.2 Temperature and pressure measuring instruments and a sight glass should be installed immediately downstream of the meter to determine if the refrigerant liquid is adequately sub-cooled. Sub-cooling of 2,0 °C and the absence of any vapour bubbles in the liquid leaving the meter are considered adequate. It is recommended that the meter be installed at the bottom of a vertical downward loop in the liquid line to take advantage of the static head of the liquid thus provided.

F.2.3 At the end of the test, a sample of the circulating refrigerant and oil mixture may be taken from the equipment and its concentration of oil, X_o, calculated using Formula (F.1):

$$X_o = \frac{W_5 - W_1}{W_3 - W_1} \tag{F.1}$$

The total indicated flow rate should be corrected for the amount of oil circulating.

F.3 Refrigerant temperature and pressure measurements

The temperature of refrigerant entering and leaving the indoor-side of the equipment should be measured with instruments having an accuracy of ±0,1 K. The pressure of refrigerant entering and leaving the indoor-side of the equipment should be measured with instruments having an accuracy of ±2,0 % of the indicated value.

 © ISO 2017 – All rights reserved

F.4 Calculation of cooling capacity

Total cooling capacity, ϕ_{tci}, based on volatile refrigerant flow data, is calculated using Formula (F.2):

$$\phi_{\mathrm{tci}} = X_{\mathrm{r}} q_{\mathrm{ro}} \left(h_{\mathrm{r2}} - h_{\mathrm{r1}} \right) - P_{\mathrm{i}} \tag{F.2}$$

F.5 Calculation of heating capacities

Total heating capacity, ϕ_{thi}, based on volatile refrigerant flow data, is calculated using Formula (F.3):

$$\phi_{\mathrm{thi}} = X_{\mathrm{r}} q_{\mathrm{ro}} \left(h_{\mathrm{r1}} - h_{\mathrm{r2}} \right) + P_{\mathrm{i}} \tag{F.3}$$

© ISO 2017 – All rights reserved

Annex G
(informative)

Outdoor air enthalpy test method

G.1 General

G.1.1 In the air enthalpy test method, capacities are determined from measurements of entering and leaving wet- and dry-bulb temperatures and the associated airflow rate.

G.1.2 Outdoor air enthalpy tests are subject to the apparatus arrangement limitations specified in G.2.1. Additional provisions apply if the compressor is ventilated independently (see G.2.2). Line loss adjustment, permitted by G.4.3, may be carried out if the equipment employs remote outdoor coils.

G.2 Test room requirements

G.2.1 When the air enthalpy method is employed for outdoor-side tests, it should be ascertained whether the attachment of the airflow measuring device changes the performance of the equipment being tested and, if so, corrections should be made for this change (see Figure G.1). To accomplish this, the equipment should have thermocouples soldered to return bends at approximately the midpoints of each indoor coil and outdoor coil circuit. Equipment not sensitive to refrigerant charge may, alternatively, be provided with pressure gauges connected to access valves or tapped into the suction and discharge lines. The equipment should then be operated at the desired conditions, with the indoor-side test apparatus connected but not the outdoor-side apparatus. Data should be recorded at 10 min intervals for a period of not less than 30 min after equilibrium has been attained. The outdoor-side test apparatus should then be connected to the equipment and the pressure or temperatures indicated by the aforementioned gauges or thermocouples noted. If, after equilibrium is again attained, these do not average within ±0,3 K or its pressure equivalent of the averages observed during the preliminary test, the outdoor airflow rate should be adjusted until the specified agreement is attained. The test should be continued for a period of 30 min after attainment of equilibrium at the proper conditions with the outdoor test apparatus connected; the indoor-side test results during this interval should agree to within ±2,0 % with the results obtained during the preliminary test period. This applies for both the cooling and the heating cycle, but only need be done at any one condition for each.

G.2.2 For equipment in which the compressor is ventilated independently of the outdoor air stream, the calorimeter air enthalpy method arrangement should be employed in order to take into account compressor heat radiation (see Figure G.1).

G.2.3 When the outdoor airflow is adjusted as described in G.2.1, the adjusted airflow rate is employed in the capacity calculation. In such cases, however, the outdoor fan power input observed during the preliminary tests should be used for rating purposes.

When testing multi-split air conditioners and heat pumps, temperature of air entering all indoor units or an outdoor unit shall be within 0,5 K of the average.

© ISO 2017 – All rights reserved

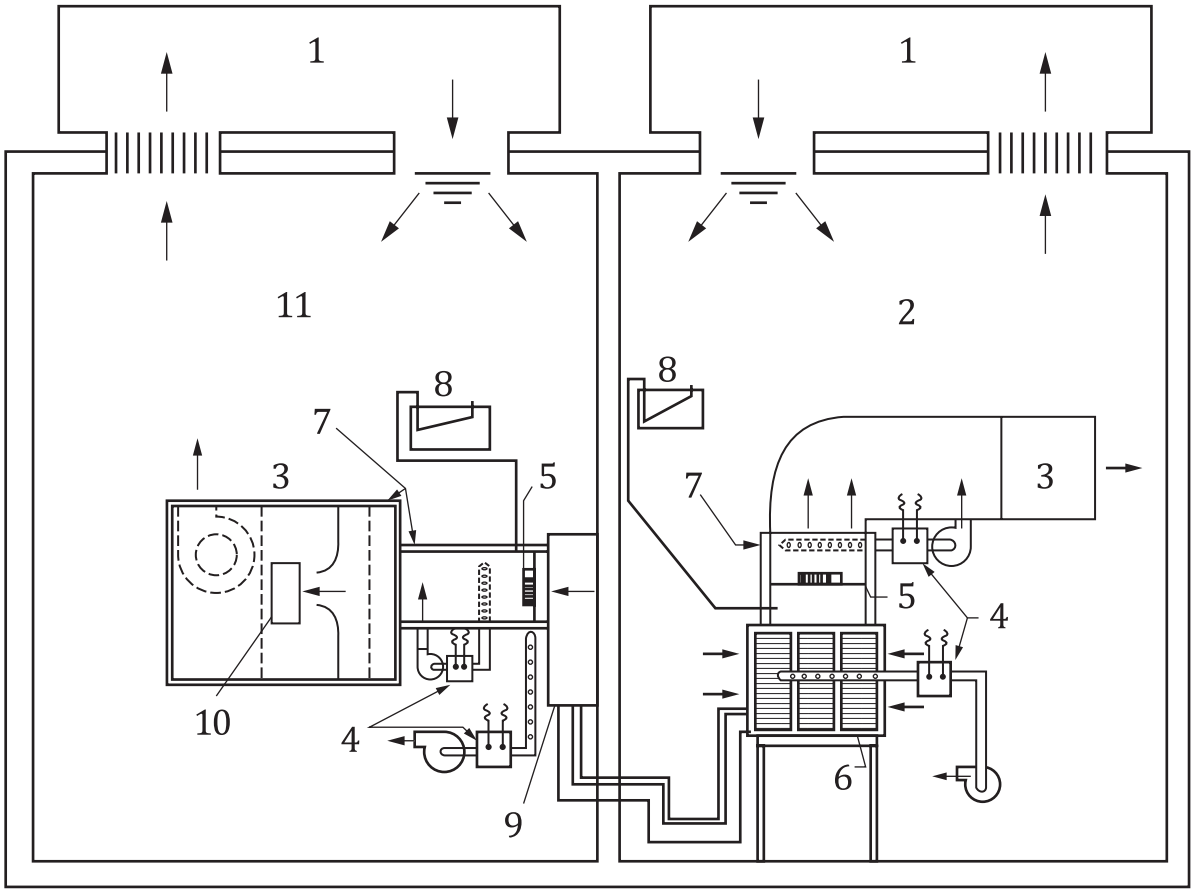

Key

1 room conditioning apparatus
2 outdoor-side test room
3 airflow measuring apparatus
4 air temperature and humidity measuring instruments
5 mixer
6 outdoor unit of equipment under test
7 insulation
8 apparatus for differential pressure measurement
9 indoor-side coil section of equipment under test
10 door/window
11 indoor-side test room

Figure G.1 — Outdoor air enthalpy test method arrangement

G.3 Testing conditions

When the outdoor air enthalpy method is used, the requirements in 6.1.3.1 apply to both the preliminary test (see G.2.1) and the regular equipment test.

G.4 Calculations

G.4.1 Total indoor cooling capacity based on outdoor-side data, ϕ_{tco}, is calculated using Formula (G.1):

$$\varphi_{tco} = \frac{q_{vo}(c_{pa4}t_{a4} - c_{pa3}t_{a3})}{v'_n(1+W_n)} - P_t \qquad \text{(G.1)}$$

© ISO 2017 – All rights reserved

G.4.2 Total heat capacity based on outdoor-side data, ϕ_{tho}, is calculated using Formula (G.2):

$$\varphi_{\text{tho}} = \frac{q_{v\text{o}}(h_{\text{a3}} - h_{\text{a4}})}{[v'_{\text{n}}(1+W_{\text{n}})]} + P_{\text{t}} \tag{G.2}$$

G.4.3 If line loss corrections are to be made, they should be included in the capacity calculations. Allowance should be made using Formula (G.3):

$$\phi_{\text{L}} = \left(\frac{1}{R_1 + R_2}\right) L(\Delta t) \tag{G.3}$$

where

$$R_1 = \frac{\ln\left(\frac{0{,}5D_T + T}{0{,}5D_T}\right)}{2\pi\lambda} = \frac{1}{2\pi\lambda}\ln\left(1 + \frac{2T}{D_T}\right) \tag{G.4}$$

$$R_2 = \frac{1}{\pi(B_T + 2T)\alpha_a} \tag{G.5}$$

Δt is the temperature difference between the inside and the outside of the tube;

T is the thickness of the tubing insulation (m);

L is the length of refrigerant tubing (m);

λ is the thermal conductivity of the interconnecting tubing, in W/(m·K);

α_a is the heat transfer coefficient of the interconnecting tubing, in W/(m^2·K);

R_1, R_2 is thermal resistance per unit length(K·m/W).

© ISO 2017 – All rights reserved

Annex H
(informative)

Indoor calorimeter confirmative test method

H.1 General

H.1.1 This annex provides a test method for confirming the test results when the cooling and heating capacities are determined by the indoor air enthalpy test method.

H.1.2 In this test method, confirmation should be carried out in the test room specified in H.2 using the measuring method specified in H.3.

H.2 Test room requirements

A recommended test room is shown in Figure H.1. This test room should be constructed such that the air enthalpy test apparatus is installed in the indoor-side test chamber of the calorimeter described in Annex D. The calorimeter should be of either the calibrated room type or the balanced ambient room type. The air enthalpy test apparatus should be equipped with not only a means of measuring airflow rate and enthalpies at the inlet and outlet of the equipment under test, but also a means for measuring the total power input to the air enthalpy test apparatus. It is recommended that air leaving the air enthalpy test apparatus be directed to the vicinity of the intake opening of the reconditioning apparatus of the calorimeter.

H.3 Measurement

H.3.1 Measurements should be carried out 1 h after attainment of equilibrium conditions.

H.3.2 Simultaneous measurements made by the calorimeter and the air enthalpy test apparatus should be made in accordance with the methods specified. When determined by measurement using the calorimeter, cooling capacity should be calculated in accordance with Formula (D.1) and heating capacity should be calculated in accordance with Formula (D.7). Likewise, when determined by measurement with the air enthalpy test apparatus, cooling capacity is calculated in accordance with Formula (E.1) and heating capacity in accordance with Formula (E.5).

© ISO 2017 – All rights reserved

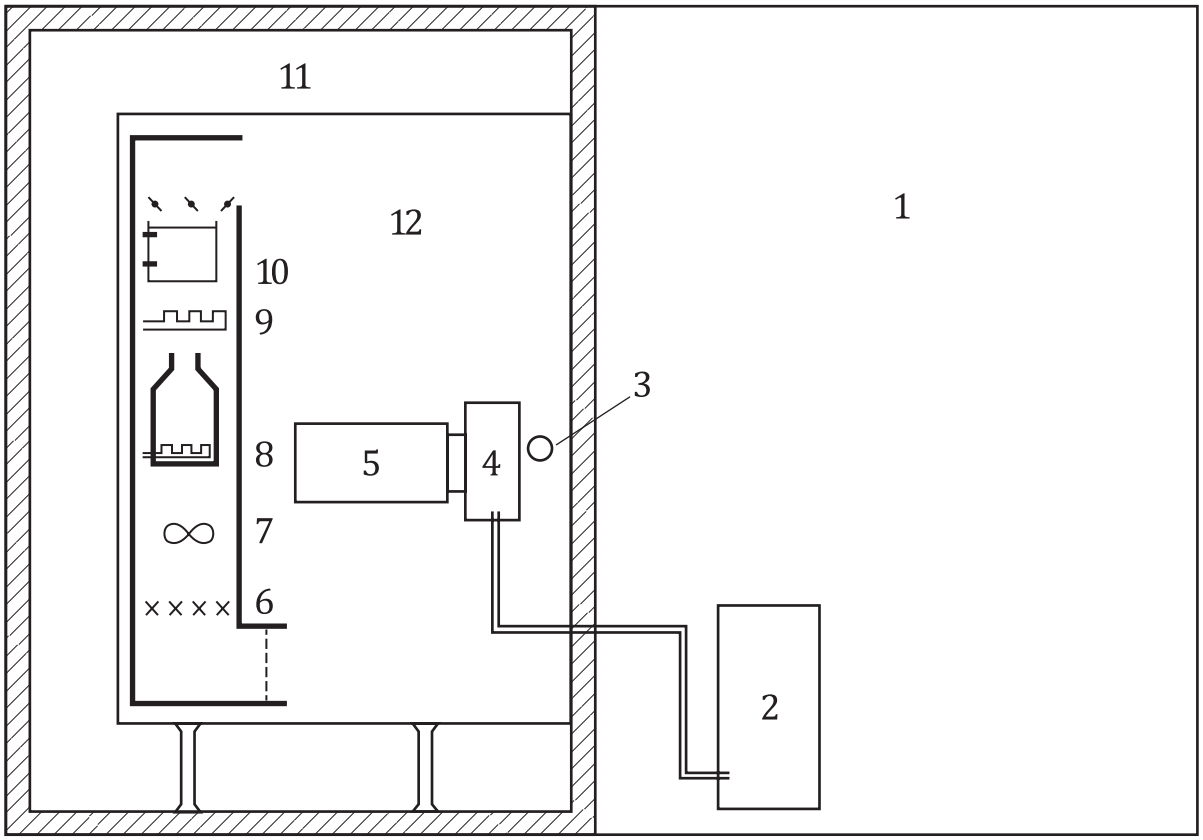

Key

1 outdoor-side test chamber
2 equipment under test – outdoor unit
3 air-sampling tube
4 equipment under test – indoor unit
5 airflow measuring apparatus
6 mixer
7 fan
8 humidifier
9 heating coil
10 cooling coil
11 controlled-temperature air space
12 indoor

Figure H.1 — Indoor calorimeter confirmative test method arrangement

© ISO 2017 – All rights reserved

Annex I
(informative)

Outdoor calorimeter confirmative test method

I.1 General

I.1.1 This annex provides a test method for confirming the test results when the cooling and heating capacities are determined by the indoor air enthalpy test method.

I.1.2 In this test method, confirmation should be carried out in the test room specified in I.2 using the measuring method specified in I.3.

I.2 Test room requirements

The air enthalpy test apparatus in the indoor-side test chamber should be constructed in accordance with this document. The outdoor-side apparatus is the calorimeter, which should be constructed and equipped with the measuring means described in Annex D. A recommended test room is shown in Figure I.1.

I.3 Measurement

I.3.1 Measurements should be carried out 1 h after attainment of equilibrium conditions.

I.3.2 Simultaneous measurements should be made using the air enthalpy apparatus on the indoor-side and the calorimeter on the outdoor-side in accordance with the methods specified. When determined by measurement using the calorimeter, cooling capacity should be calculated in accordance with Formula (D.3) and heating capacity should be calculated in accordance with Formula (D.8).

© ISO 2017 – All rights reserved

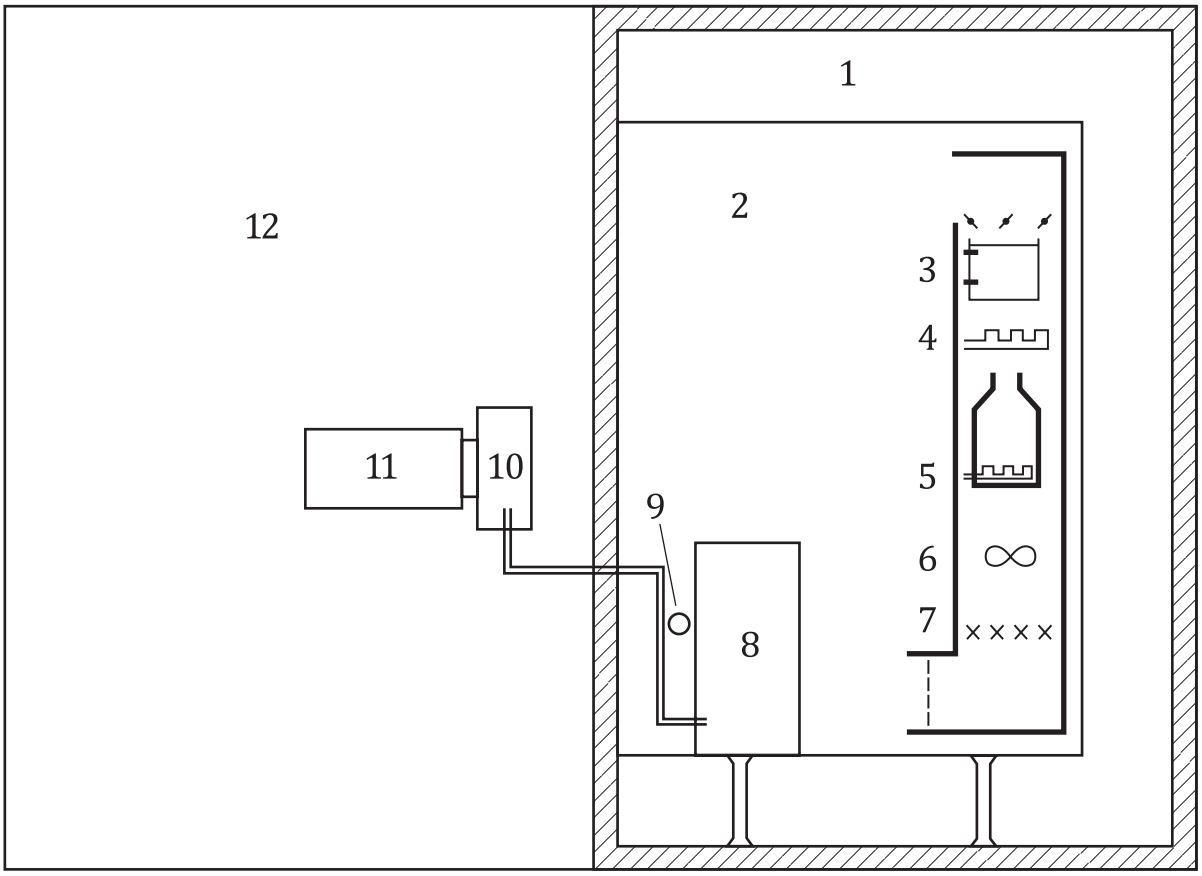

Key

1 controlled-temperature air space
2 outdoor-side test chamber
3 cooling coil
4 heating coil
5 humidifier
6 fan
7 mixer
8 equipment under test – outdoor unit
9 air-sampling tube
10 equipment under test – indoor unit
11 airflow measuring apparatus
12 indoor-side test chamber

Figure I.1 — Outdoor calorimeter confirmative test method arrangement

© ISO 2017 – All rights reserved

Annex J
(informative)

Balanced-type calorimeter confirmative test method

J.1 General

J.1.1 This annex provides a method for manufacturers to confirm the test results when the cooling and heating capacities are determined by the indoor air enthalpy test method.

This test method should not be used as a method of confirmation by testing laboratories, because it does not provide for simultaneous confirmative test results.

J.1.2 This method should be carried out by installing the equipment, which has been measured by the balanced-type calorimeter, in the indoor air enthalpy test apparatus for measurement under the same conditions as in the balanced-type calorimeter.

J.1.3 The performance of the indoor air enthalpy apparatus should be verified at least every 12 months using an industry-standard cooling/heating calibrating device. A calibrating device may also be another piece of equipment for which the performance has been measured at an accredited national test laboratory as part of an industry-wide cooling/heating capacity verification programme.

J.2 Measurement

J.2.1 When this test method is employed, it is desirable to confirm that there is no difference between the capacities measured by the calorimeter and those measured using the indoor air enthalpy test apparatus. To accomplish this, the equipment should have thermocouples soldered to the return bends at the approximate midpoint of each indoor coil and outdoor coil circuit. Equipment not sensitive to refrigerant charge may, alternatively, be provided with pressure gauges connected to access valves or tapped into the suction and discharge lines

J.2.2 Firstly, the equipment to be tested should be installed in the balanced-type calorimeter described in Annex D in order to carry out the measurement of capacity. Then, the equipment should be moved to the indoor air enthalpy test apparatus and be measured using the specified method. It is desirable to measure both cooling and heating capacities, though either may be measured. However, if cooling capacity is measured by the calorimeter, the same measurement should also be made in the indoor air enthalpy test apparatus.

J.2.3 If no alteration is made to the installation of the equipment under test, a series of tests conducted one immediately after the other should be deemed valid.

© ISO 2017 – All rights reserved

Annex K
(informative)

Cooling condensate measurements

K.1 General

The latent cooling capacity should be determined from measurements of the condensate flow rate. The drain connection should be trapped to stabilize the condensate flow.

K.2 Calculations

K.2.1 The latent cooling capacity, ϕ_d, is calculated using Formula (K.1):

$$\phi_d = K_1 \cdot q_{wc} \quad \text{(K.1)}$$

K.2.2 The sensible cooling capacity, ϕ_{sci}, is then calculated using Formula (K.2):

$$\phi_{sci} = \phi_{tci} - \phi_d \quad \text{(K.2)}$$

© ISO 2017 – All rights reserved

Annex L
(normative)

Supplemental requirements when rating fan-less (coil-only) type units

L.1 General

L.1.1 Except as noted in this annex, ducted equipment that does not include an indoor fan shall be tested and rated as specified in the normative sections of this document.

NOTE Ducted equipment that does not include an indoor fan is also referred to as a "coil-only" unit.

L.1.2 Equipment that does not include an indoor fan when tested is typically combined with a hot-air furnace when installed in a building. The furnace's fan provides airflow across the indoor coil of the air-conditioner or heat pump.

L.2 Indoor coil installation — Static pressure measurements

L.2.1 A short plenum shall be attached to both the inlet and the outlet of the equipment. These plenums shall have cross-sectional dimensions equal to the respective dimensions of the equipment inlet and outlet. A static pressure tap shall be added at the centre of each side of each plenum, if rectangular, or at four evenly distributed locations along the circumference of oval or round plenums. For each plenum, the four static pressure taps shall be manifolded together. The minimum length of the plenums and the location of the static pressure taps relative to the equipment inlet and outlet shall be as shown in Figure L.1.

L.2.2 The static pressure taps described in L.2.1 shall be fabricated as described in C.4.1. A manometer (or equivalent instrument for measuring differential pressure) that is accurate to within ±2,5 Pa shall be used to measure the static pressure between the indoor coil air inlet and the outlet. One side of this

© ISO 2017 – All rights reserved

manometer shall be connected to the manifolded pressure taps installed in the outlet plenum. The other side of the manometer shall be connected to the manifolded pressure taps located in the inlet plenum.

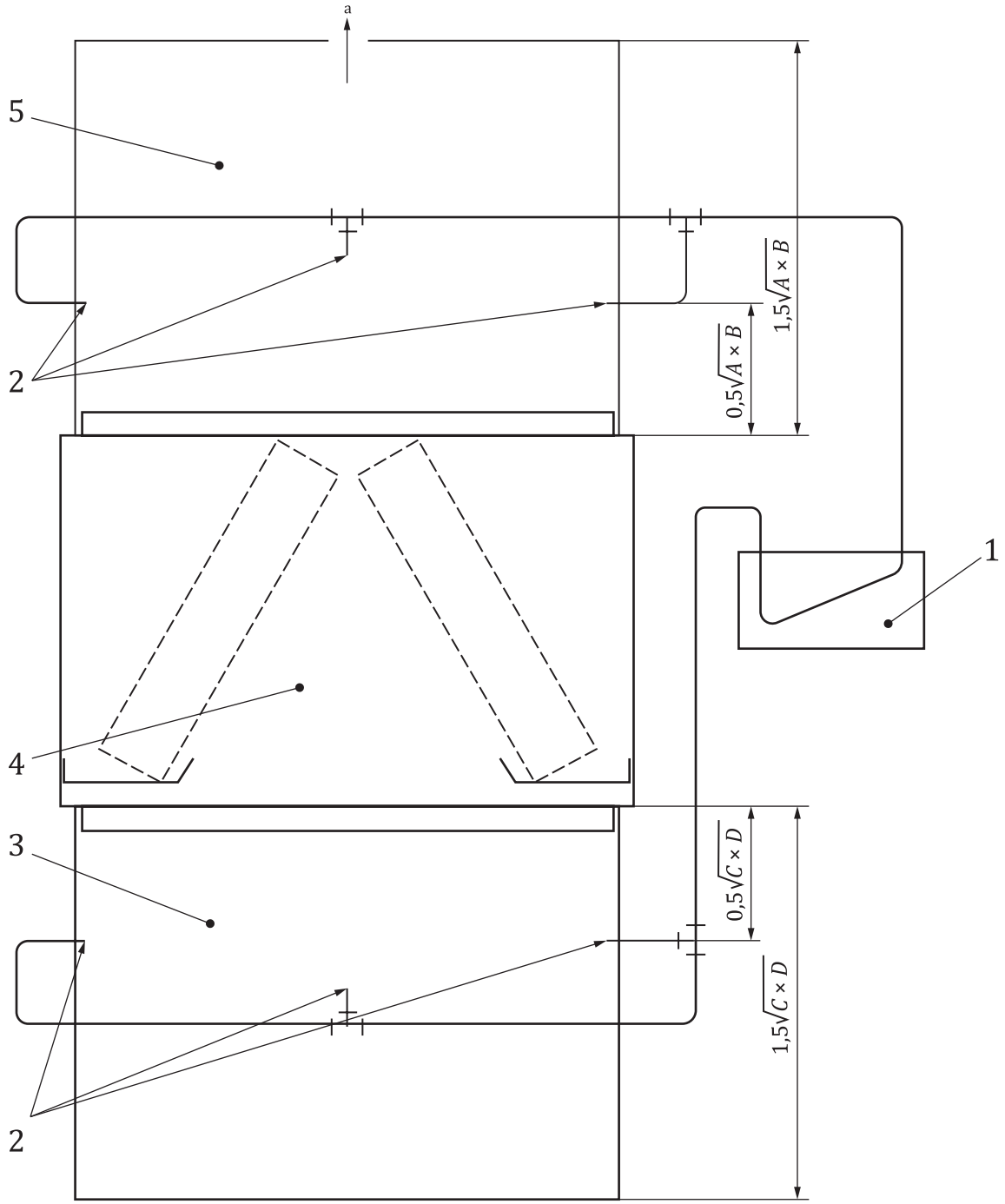

Key

1	manometers
2	outlet pressure taps
3	inlet duct
4	coil section
5	outlet duct
A and *B*	outlet dimensions
C and *D*	inlet dimensions
a	To airflow measuring apparatus.

NOTE 1 *A* and *B* are outlet dimensions, *C* and *D* are inlet dimensions.

© ISO 2017 – All rights reserved

NOTE 2 For circular ducts, substitute $\frac{\pi D_i^2}{4}$ for $C \times D$ and $\frac{\pi D_o^2}{4}$ for $A \times B$.

NOTE 3 The length of the inlet duct, $1{,}5\sqrt{C \times D}$, is a minimum dimension. For more precise results, use $4\sqrt{C \times D}$.

Figure L.1 — Air static pressure drop measurement for a coil-only unit

L.3 Indoor-side air quantity

L.3.1 For equipment supplied without an indoor fan, all tests shall be conducted at the air volume rate specified by the manufacturer, expressed in terms of standard air, or at a maximum pressure drop of 75 Pa across the indoor coil assembly, recommended enclosures and attachment means, whichever results in a lower air volume rate. If the manufacturer specifies only one flow rate, then this air volume rate shall be used for all performance tests and for all heating capacity tests. If the manufacturer specifies different air volume flow rates for cooling and heating and a method to obtain different air volume rates, these air volume flow rates shall be used for cooling and heating capacity and performance tests respectively. Coil pressure drop measurements shall be made using the static pressure taps as specified in L.2.1 with the compressor or compressors not operating.

L.3.2 Airflow through the indoor coil shall be created by a separate fan. This fan shall be located downstream of the indoor coil, the outlet static pressure taps shown in Figure L.1 and, if used, the instrumentation used to measure the dry-bulb temperature and water vapour content of the outlet air. If air volume rate is measured as described in Annex C, then the exhaust fan of the airflow measuring apparatus can be used to generate the airflow through the indoor coil.

L.4 Capacity adjustments

The measured cooling capacity shall be adjusted by deducting the estimated power required to circulate indoor air, determined as described in L.3, and the measured heating capacity shall be adjusted by adding the estimated power required to circulate indoor air.

The estimated fan power for equipment without an indoor fan, P_{fan} is calculated using Formula (L.1):

$$P_{fan} = \frac{q_V \left(P_e + P_c + 50\right)}{\left(\eta_{fan,i} \times \eta_{mot,i}\right)} \tag{L.1}$$

where $\eta_{fan,i}$ is the estimated indoor fan static efficiency, and is calculated using Formula (L.2):

$$\eta_{fan,i} = 0{,}1881 \times \mathrm{In}\left(P_e + P_c + 50\right) - 0{,}47 \tag{L.2}$$

and where $\eta_{mot,i}$ is the estimated indoor motor efficiency, and is calculated using Formula (L.3):

$$\eta_{mot,i} = 0{,}06 \times \mathrm{In}\left[q_V \left(\frac{P_e + P_c + 50}{\eta_{fan,i}}\right)\right] + 0{,}123 \tag{L.3}$$

© ISO 2017 – All rights reserved

Annex M
(informative)

Pictorial examples of the heating capacity test procedures given in 7.1

M.1 General

The six schematic diagrams given in the examples shown in Figures M.2 to M.7 show several of the cases which could occur while conducting a heating capacity test as specified in 7.1. All examples show cases where a defrost cycle ends the preconditioning period. Figures M.2 to M.7 represent cases where the indoor air enthalpy method is used and, as a result, the data collection period for the transient test lasts 3 h or three complete cycles (as opposed to 6 h or six complete cycles if using the calorimeter test method).

M.2 Procedure flowchart for heating capacity test

Figure M.1 gives the procedures to be adopted and the clause numbers of this document to be used when conducting the heating capacity test.

© ISO 2017 – All rights reserved

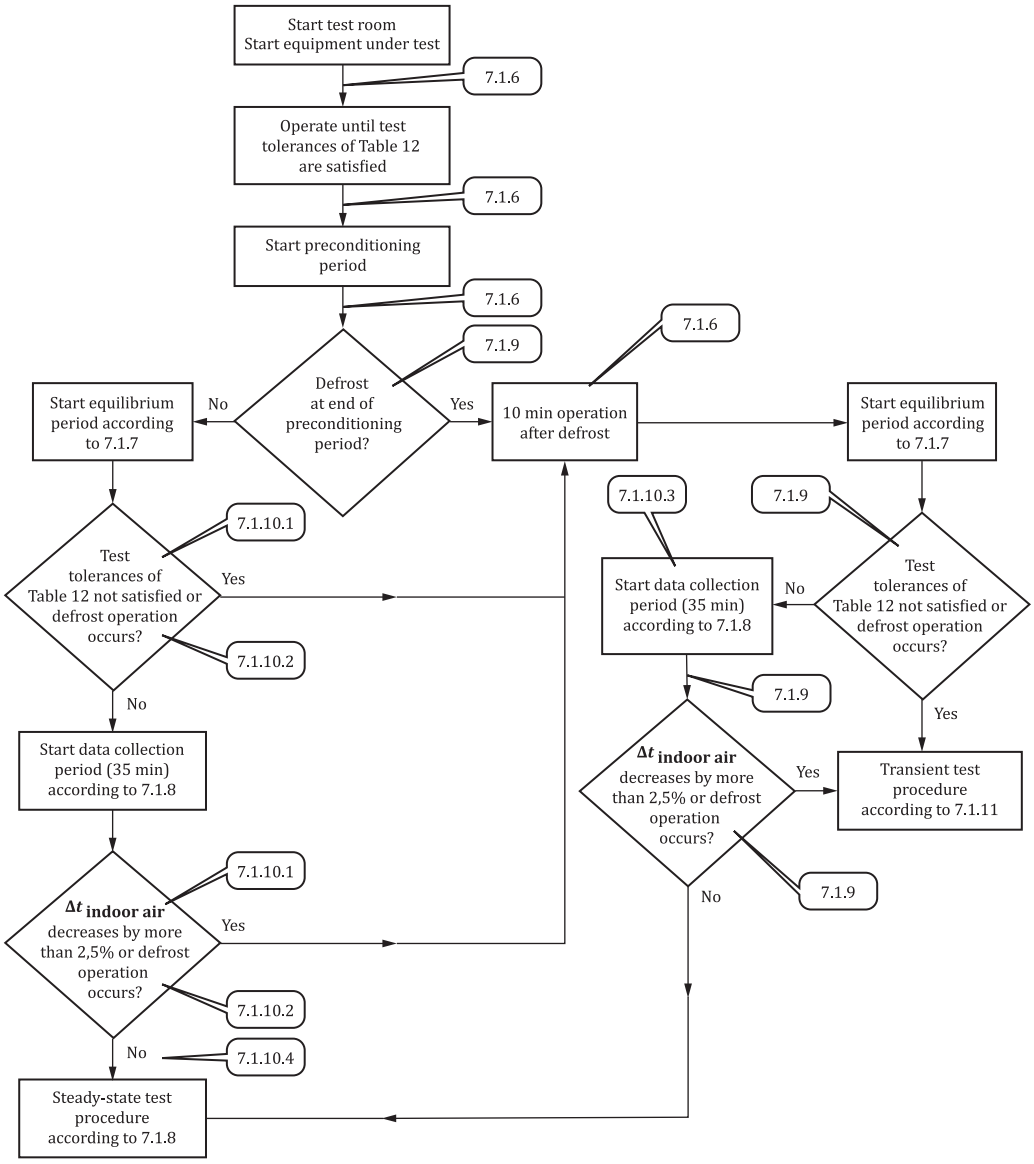

Figure M.1 — Procedure flowchart

© ISO 2017 – All rights reserved

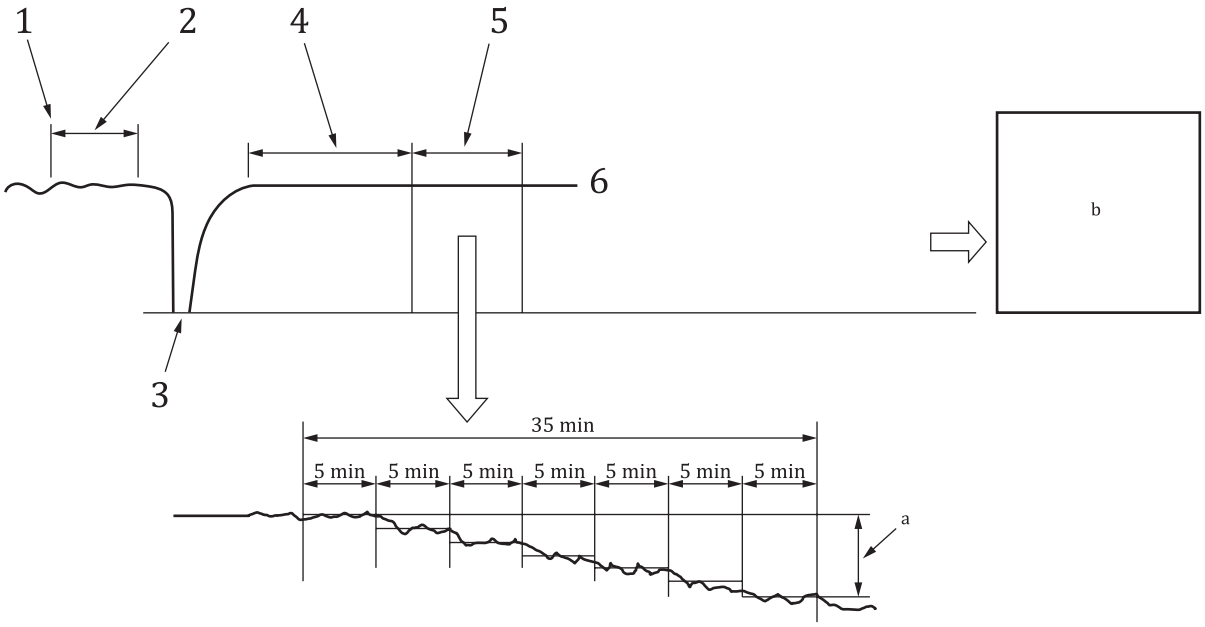

Key

1 compliance with test tolerances first achieved
2 preconditioning period (10 min minimum)
3 defrost at end of preconditioning period
4 equilibrium period (60 min)
5 data collection period (35 min)
6 difference in indoor air temperature, $\Delta t_{\text{indoor air}}$
a Δt_{indoor} air decreases by 2,5 % or less during the first 35 min of the data collection period.
b Steady-state test: terminate test when data collection period equals 35 min.

Figure M.2 — Steady-state heating capacity test

© ISO 2017 – All rights reserved

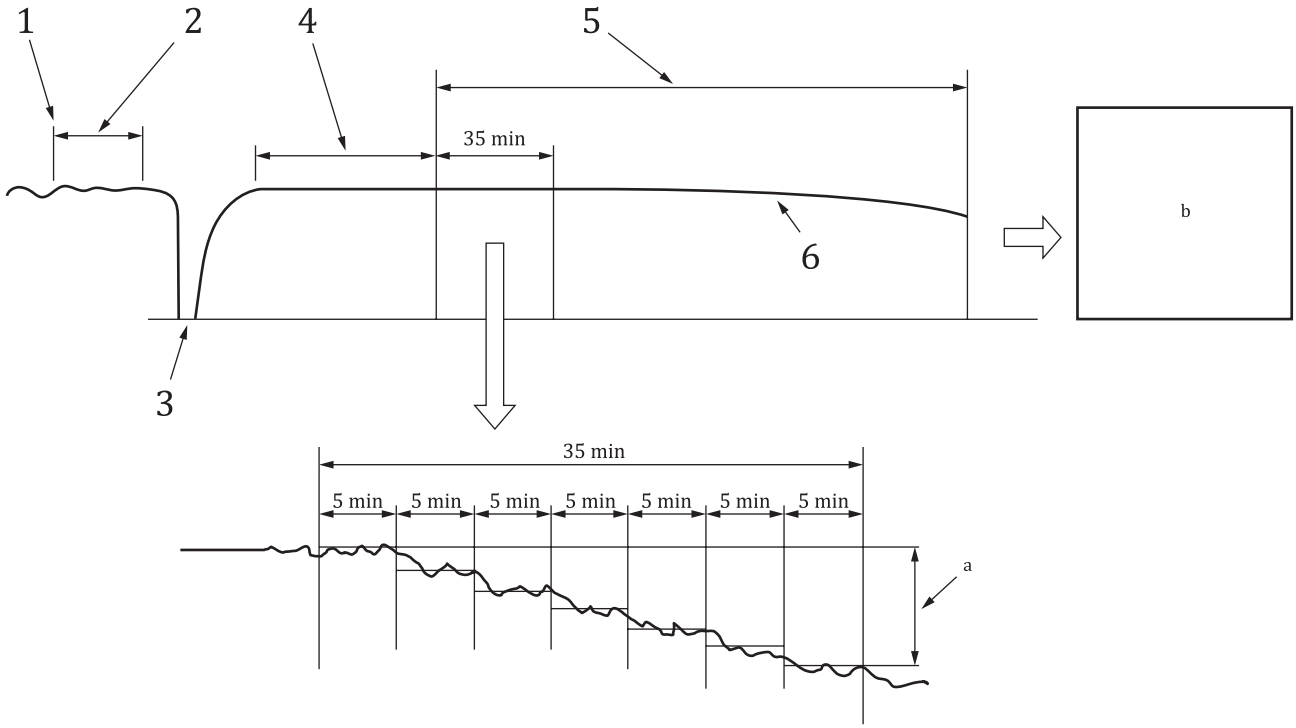

Key

1 compliance with test tolerances first achieved
2 preconditioning period (10 min minimum)
3 defrost at end of preconditioning period
4 equilibrium period (60 min)
5 data collection period (3 h)
6 difference in indoor air temperature, $\Delta t_{\text{indoor air}}$
a $\Delta t_{\text{indoor air}}$ decreases by more than 2,5 % during the first 35 min of the data collection period.
b Transient test: terminate test when data collection period equals 3 h.

Figure M.3 — Transient heating capacity test with no defrost cycles

© ISO 2017 – All rights reserved

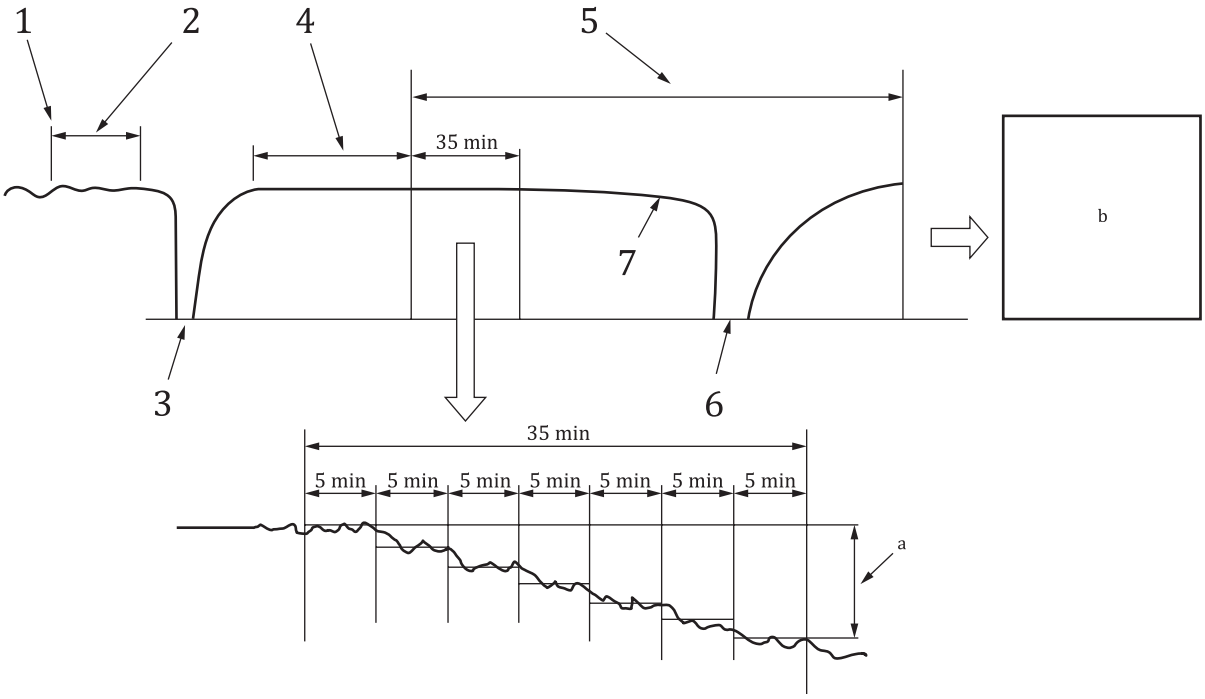

Key

1 compliance with test tolerances first achieved
2 preconditioning period (10 min minimum)
3 defrost at end of preconditioning period
4 equilibrium period (60 min)
5 data collection period (3 h)
6 automatic defrost cycle occurs
7 difference in indoor air temperature, $\Delta t_{\text{indoor air}}$
a $\Delta t_{\text{indoor air}}$ decreases by more than 2,5 % during the first 35 min of the data collection period.
b Transient test: terminate test when data collection period equals 3 h.

Figure M.4 — Transient heating capacity test with one defrost cycle during the data collection period

© ISO 2017 – All rights reserved

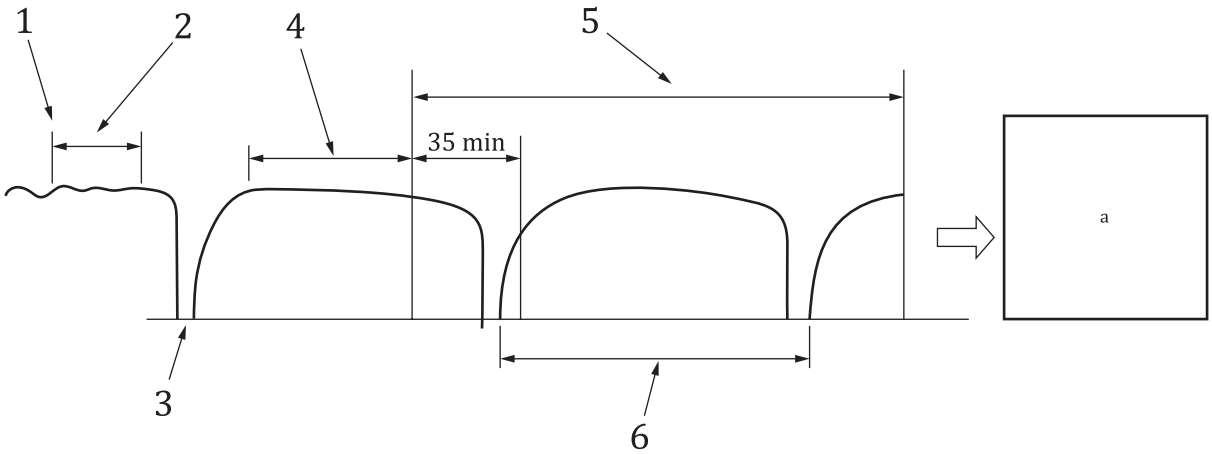

Key

1 compliance with test tolerances first achieved
2 preconditioning period (10 min minimum)
3 defrost at end of preconditioning period
4 equilibrium period (60 min)
5 data collection period (3 h)
6 one complete defrost cycle
a Transient test: terminate test when data collection period equals 3 h.

Figure M.5 — Transient heating capacity test with one complete cycle during the data collection period

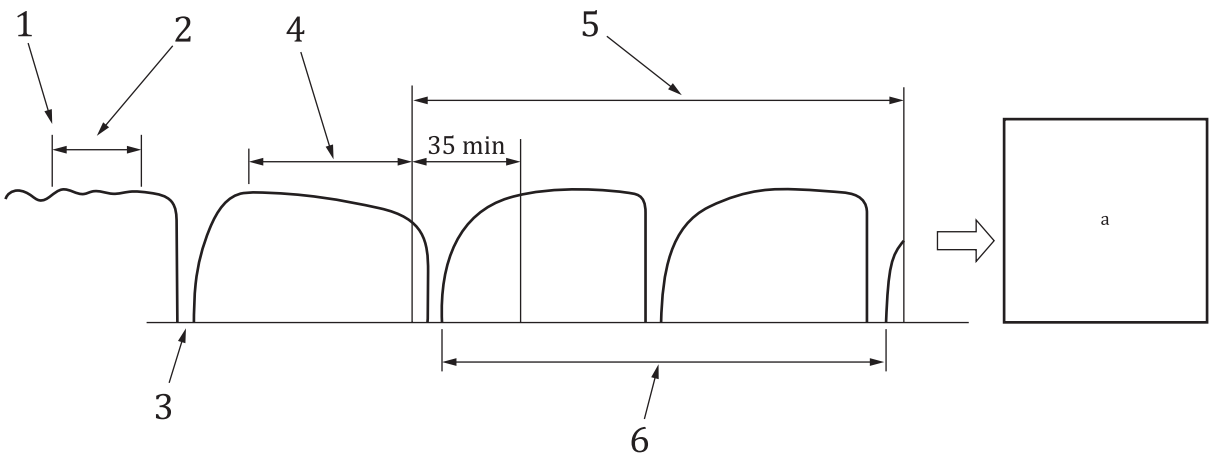

Key

1 compliance with test tolerances first achieved
2 preconditioning period (10 min minimum)
3 defrost at end of preconditioning period
4 equilibrium period (60 min)
5 data collection period (3 h)
6 two complete defrost cycles
a Transient test: terminate test when data collection period equals 3 h.

Figure M.6 — Transient heating capacity test with two complete cycles during the data collection period

© ISO 2017 – All rights reserved

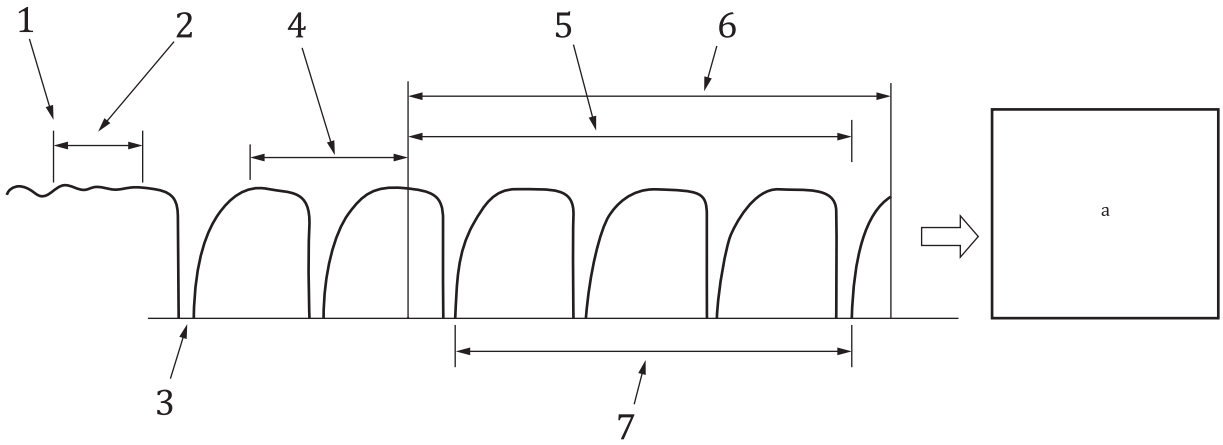

Key

1 compliance with test tolerances first achieved
2 preconditioning period (10 min minimum)
3 defrost at end of preconditioning period
4 equilibrium period (60 min)
5 data collection period
6 three hours
7 three complete defrost cycles
a Transient test: terminate test at the end of three complete cycles within the data collection period.

Figure M.7 — Transient heating capacity test with three complete cycles during the data collection period

© ISO 2017 – All rights reserved

Bibliography

[1] ISO 3966, *Measurement of fluid flow in closed conduits — Velocity area method using Pitot static tubes*

[2] ISO 5167-1, *Measurement of fluid flow by means of pressure differential devices inserted in circular cross-section conduits running full — Part 1: General principles and requirements*

[3] ISO 15042, *Multiple split-system air conditioners and air-to-air heat pumps — Testing and rating for performance*

[4] ISO/TS 16491:2012, *Guidelines for the evaluation of uncertainty of measurement in air conditioner and heat pump cooling and heating capacity tests*

© ISO 2017 – All rights reserved

ICS 23.120; 27.080

Price based on 89 pages

© ISO 2017 – All rights reserved