DEUTSCHE NORM

July 2009

DIN EN 1886

ICS 91.140.30

Supersedes
DIN EN 1886:1998-07

Ventilation for buildings – Air handling units – Mechanical performance English version of DIN EN 1886:2009-07

Lüftung von Gebäuden –
Zentrale raumlufttechnische Geräte –
Mechanische Eigenschaften und Messverfahren
Englische Fassung DIN EN 1886:2009-07

Document comprises 37 pages

© No part of this standard may be reproduced without prior permission of
DIN Deutsches Institut für Normung e. V., Berlin. Beuth Verlag GmbH, 10772 Berlin, Germany,
Copyright Deutsches Institut Fur Normung E.V. e right of sale for German Standards (DIN-Normen).

English price group 15
www.din.de
www.beuth.de

1537351

Start of validity

This standard takes effect on 1 July 2009.

National foreword

This standard has been prepared by Technical Committee CEN/TC 156 “Ventilation for buildings” (Secretariat: BSI, United Kingdom).

The responsible German body involved in its preparation was the *Normenausschuss Maschinenbau* (Mechanical Engineering Standards Committee), Section *Allgemeine Lufttechnik.*

The European Standards referred to in clause 2 and in the bibliography of the EN have been published as the corresponding DIN EN or DIN EN ISO Standards with the same number.

Amendments

This standard differs from DIN EN 1886:1998-07 as follows:

a) The standard has been revised in form and substance.

b) In addition to the “real unit”, a “model box” may also be used as test unit.

c) Clause 2 “Normative references” has been updated.

d) Clause 3 “Terms and definitions” has been supplemented by the “model box”.

e) Clause 4 “Usage of real units and/or model boxes for the verification of mechanical performances” and Table 1 have been added.

f) Clause 5 “Mechanical strength of casing” and the tables have been revised (e.g. classification, class designation, specification of test pressures for the model box).

g) Clause 6 “Casing air leakage” including Tables 4 and 5 has been revised (e.g. classification, class designation) and equation (1) has been added.

h) Clause 7 “Filter bypass leakage”:

   — Table 7 and Figure 5 have been revised.

   — Table 6 “Air flow rate of the filter section (q_{vnom}) subject to the kind of unit” has been added.

   — Figure 7 “Test apparatus for testing filter sections downstream of the fan — second stage” has been added.

   — Figure 9 “Test apparatus for testing filter sections with heat recovery section” has been added.

i) Clause 8 “Thermal performance of casing” has been revised:

   — Equation (7) for the determination of the thermal transmittance *U* has been added.

   — The test procedure has been modified.

   — Figure 10 “Zoning and installation of measuring devices” has been added.

j) Clause 9 “Acoustic insulation of casing” has been revised.

k) Clause 10 “Fire protection” and Clause 11 “Mechanical safety” have been revised.

Previous editions

DIN EN 1886: 1998-07

Copyright Deutsches Institut Fur Normung E.V.

EUROPEAN STANDARD

NORME EUROPÉENNE

EUROPÄISCHE NORM

EN 1886

December 2007

ICS 91.140.30

Supersedes EN 1886:1998

English Version

Ventilation for buildings - Air handling units - Mechanical performance

Ventilation des bâtiments - Caissons de traitement d'air - Performances mécaniques

Lüftung von Gebäuden - Zentrale raumlufttechnische Geräte - Mechanische Eigenschaften und Messverfahren

This European Standard was approved by CEN on 26 July 2006.

CEN members are bound to comply with the CEN/CENELEC Internal Regulations which stipulate the conditions for giving this European Standard the status of a national standard without any alteration. Up-to-date lists and bibliographical references concerning such national standards may be obtained on application to the CEN Management Centre or to any CEN member.

This European Standard exists in three official versions (English, French, German). A version in any other language made by translation under the responsibility of a CEN member into its own language and notified to the CEN Management Centre has the same status as the official versions.

CEN members are the national standards bodies of Austria, Belgium, Bulgaria, Cyprus, Czech Republic, Denmark, Estonia, Finland, France, Germany, Greece, Hungary, Iceland, Ireland, Italy, Latvia, Lithuania, Luxembourg, Malta, Netherlands, Norway, Poland, Portugal, Romania, Slovakia, Slovenia, Spain, Sweden, Switzerland and United Kingdom.

EUROPEAN COMMITTEE FOR STANDARDIZATION
COMITÉ EUROPÉEN DE NORMALISATION
EUROPÄISCHES KOMITEE FÜR NORMUNG

Management Centre: rue de Stassart, 36 B-1050 Brussels

© 2007 CEN All rights of exploitation in any form and by any means reserved worldwide for CEN national Members.

Ref. No. EN 1886:2007: E

Copyright Deutsches Institut Fur Normung E.V.

Contents

Page

Foreword ... 4
Introduction ... 6
1 Scope ... 7
2 Normative references ... 7
3 Terms and definitions ... 8
4 Usage of real units and/or model boxes for the verification of mechanical performances ... 8
5 Mechanical strength of casing ... 9
5.1 Requirements and classification ... 9
5.2 Testing ... 12
6 Casing air leakage ... 13
6.1 Requirements and classification ... 13
6.1.1 Units operating under negative pressure only ... 13
6.1.2 Units operating under both negative and positive pressure ... 14
6.2 Testing ... 14
6.2.1 Test apparatus ... 14
6.2.2 Preparation for test ... 15
6.3 Test procedure ... 16
6.4 Determination of allowable leakage rates ... 16
7 Filter bypass leakage ... 16
7.1 Requirements ... 16
7.1.1 General ... 16
7.1.2 Acceptable filter bypass leakage rates ... 16
7.1.3 Two or more filter sections in the same unit ... 17
7.2 Testing ... 17
7.2.1 General ... 17
7.2.2 Filters downstream of the fan (positive pressure) ... 19
7.2.3 Filters upstream of the fan (negative pressure) ... 21
8 Thermal performance of casing ... 23
8.1 General ... 23
8.2 Requirements and classification ... 23
8.2.1 Thermal transmittance ... 23
8.2.2 Thermal bridging ... 24
8.3 Testing ... 25
8.3.1 General ... 25
8.3.2 Test facility ... 25
8.3.3 Testing procedure ... 27
8.3.4 Evaluation of the test results ... 28
9 Acoustic insulation of casing ... 28
9.1 General ... 28
9.2 Test requirements ... 28
9.3 Test method ... 28
9.4 Test procedure ... 29
9.5 Evaluation of the sound insertion loss D_p ... 29
10 Fire protection ... 30
10.1 General ... 30

Copyright Deutsches Institut Fur Normung E.V.

10.2 Material ... 30
10.3 Sealings for air handling units ... 30
10.4 Locally limited and small construction parts of air handling units ... 31
10.5 Air heaters ... 31
10.6 Filters, contact humidifiers and droplet eliminators of AHU's ... 31
10.7 Heat recovery ... 31

11 Mechanical safety ... 31

Annex A (informative) Arrangement and requirements for circulating fans ... 33

Bibliography ... 35

Copyright Deutsches Institut Fur Normung E.V.

Foreword

This document (EN 1886:2007) has been prepared by Technical Committee CEN/TC 156 "*Ventilation for buildings*", the secretariat of which is held by BSI.

This European Standard shall be given the status of a national standard, either by publication of an identical text or by endorsement, at the latest by June 2008, and conflicting national standards shall be withdrawn at the latest by June 2008.

This document supersedes EN 1886:1998.

The standard is a part of a series of standards for air handling units used for ventilation and air conditioning of buildings for human occupancy. It considers the mechanical performance of an air handling unit as a whole and will be supported by a standard for sections and components. The position of this standard in the whole field of standards for mechanical building services is illustrated in figure 1.

According to the CEN/CENELEC Internal Regulations, the national standards organizations of the following countries are bound to implement this European Standard: Austria, Belgium, Cyprus, Czech Republic, Denmark, Estonia, Finland, France, Germany, Greece, Hungary, Iceland, Ireland, Italy, Latvia, Lithuania, Luxembourg, Malta, Netherlands, Norway, Poland, Portugal, Romania, Slovakia, Slovenia, Spain, Sweden, Switzerland and United Kingdom.

Copyright Deutsches Institut Fur Normung E.V.

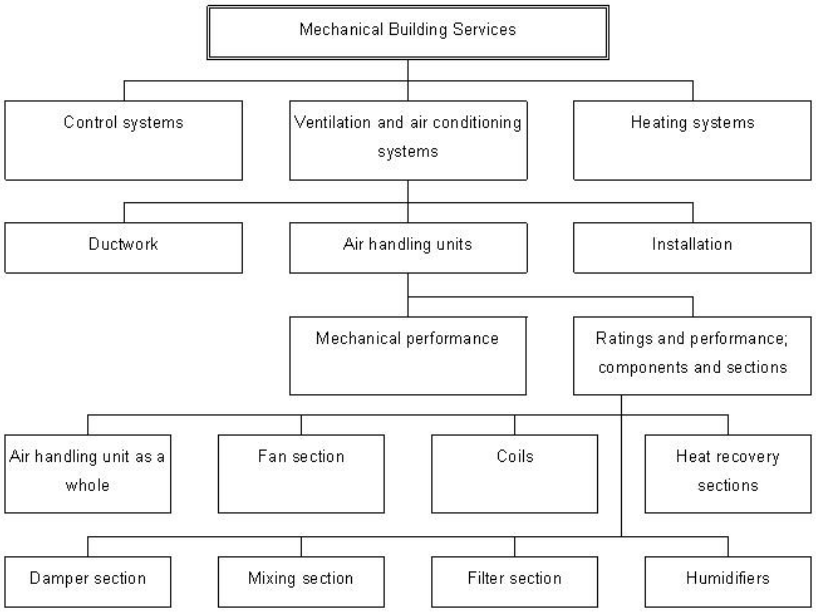

Figure 1 — Position of this standard in the field of mechanical building services

Copyright Deutsches Institut Fur Normung E.V.

Introduction

This standard specifies the mechanical performance of an air handling unit as a whole to be utilised by all involved in ventilation and air conditioning manufacturing, design, installation and maintenance. The functions and characteristics of the individual sections of the unit will be considered in another series of standards covering air handling units.

Because of different requirements due to climatic conditions and building traditions in different parts of Europe, and to the specific features of individual applications, most of the requirements are given in the form of classes, which may be specified to be used in certain regions, or separately for individual applications.

Copyright Deutsches Institut Fur Normung E.V.

1 Scope

This standard specifies test methods, test requirements and classifications for air handling units, which are supplying and/or extracting air via a ductwork ventilating/conditioning a part or the whole of the building. This standard is not applicable to the following:

a) air conditioning units serving a limited area in a building, such as fan coil units;

b) units for residential buildings;

c) units producing ventilation air mainly for a manufacturing process.

Except for the thermal and acoustic performance of the casing, the test methods and requirements are applicable to both complete units and any separate sections.

The filter bypass test is not applicable to the testing of high efficiency particulate air filters (HEPA).

NOTE HEPA filters are recommended to be installed downstream of the air handling unit. Such installations should be leak tested in accordance with the appropriate filter standards.

The test method for the thermal performance of the casing is applicable to the comparison of different constructions, but not to the calculation of thermal losses through casing or the risk of condensation.

Similarly, the test method for the acoustic performance of the casing is applicable to the comparison of different constructions, but not to the provision of accurate acoustic data for specific units.

2 Normative references

The following referenced documents are indispensable for the application of this document. For dated references, only the edition cited applies. For undated references, the latest edition of the referenced document (including any amendments) applies.

EN 779, *Particulate air filters for general ventilation — Determination of the filtration performance*

EN 1507, *Ventilation for buildings — Sheet metal air ducts with rectangular section — Requirements for strength and leakage*

EN 12237, *Ventilation for buildings — Ductwork — Strength and leakage of circular sheet metal ducts*

EN 12792:2003, *Ventilation for buildings — Symbols, terminology and graphical symbols*

EN 13053:2001, *Ventilation for buildings —- Air handling units — Ratings and performance for units, components and sections*

EN 13501-1, *Fire classification of construction products and building elements — Part 1: Classification using test data from reaction to fire tests*

EN 61310-1, *Safety of machinery — Indication, marking and actuation — Part 1: Requirements for visual, auditory and tactile signals (IEC 61310-1:1995)*

EN ISO 3743 (all parts), Acoustics — Determination of sound power levels of noise sources — Engineering methods for small, movable sources in reverberant fields

EN ISO 3744, *Acoustics — Determination of sound power levels of noise sources using sound pressure — Engineering method in an essentially free field over a reflecting plane (ISO 3744:1994)*

Copyright Deutsches Institut Fur Normung E.V.

EN ISO 11546-2, *Acoustics — Determination of sound insulation performances of enclosures — Part 2: Measurements in situ (for acceptance and verification purposes) (ISO 11546-2:1995)*

EN ISO 12100-2, *Safety of machinery — Basic concepts, general principles for design — Part 2: Technical principles (ISO 12100-2:2003)*

3 Terms and definitions

For the purposes of this European Standard, the terms and definitions given in EN 12792:2003 and EN 13053:2001 and the following apply.

3.1
air handling unit
real unit
factory made encased unit serving as a prime mover of a ventilation or air conditioning installation where outdoor air, recirculated air or extract air is treated, consisting of a fan section where a filter section and heat exchanger may be connected. In addition the unit may consist of an inlet section with one or more louvres and dampers, a mixing section, heat recovery section, one or more heating and cooling coils, humidifiers, sound attenuators and additional equipment such as controls, measuring sections etc.

3.2
air handling unit
model box
special test unit (defined in 8.3.2) used to execute measurements for general classification, comparison or categorisation of series or individual casings

4 Usage of real units and/or model boxes for the verification of mechanical performances

For clear and non-ambiguous differentiation, it shall always be indicated whether the measurement has been made on the real unit or on the model box by using the letter "M" for the model box and "R" for the real unit in documentation. Test criteria of model boxes and real units are presented in Table 1.

Copyright Deutsches Institut Fur Normung E.V.

Table 1 — Test criteria of model box and real unit

Test criteria	Kind of casing	
	Model box (M)	**Real unit (R)**
Mechanical strength	General classification of casing construction	Particular classification of casing construction and individual evaluation
Air leakage	General classification of casing construction	Particular classification of casing construction and individual evaluation
Filter bypass leakage	General classification of casing construction	Particular classification of casing construction and individual evaluation
Thermal transmittance	General classification of casing construction	---
Thermal bridging	General classification of casing construction	---
Acoustic insulation	General classification of casing construction	---

5 Mechanical strength of casing

5.1 Requirements and classification

Air handling unit casings shall be categorised into classes in accordance to Table 2.

Table 2 — Casing strength classification of air handling units

Casing class	Maximum relative deflection $mm \times m^{-1}$
D1 D2 D3	4 10 exceeding 10
NOTE The leakage test shall be done after the strength test.	

For clear and non-ambiguous differentiation it shall always be indicated whether the measurement was made on the real unit or on the model box by using letter "M" for the model box and "R" for the real unit in documentation.

EXAMPLE D1 (M)

Class D1 and Class D2 casings shall be designed and selected so that the maximum deflection of any span of the panels and/or frames does not exceed the limits in Table 2 (see Figure 2).

Copyright Deutsches Institut Fur Normung E.V.

The casings of class D1, D2 and D3 have to withstand the maximum fan pressure (not shock pressure) at the selected design fan speed. No permanent deformation (hysteresis maximum ± 2,0 mm per m frame/panel span) of the structural parts (structures and supports) or damage of the casing may occur.

Table 3 — Test pressures

Test criteria	Kind of casing	
	Model box (M)	Real unit (R)
Deflection	± 1 000 Pa	Normal operating conditions at selected design fan speed
Withstand maximum fan pressure	± 2 500 Pa	Maximum fan pressure at selected design fan speed

Parts of the real unit, which are running under positive pressure, shall be tested under positive pressure. Parts of the real unit, which are running under negative pressure, shall be tested under negative pressure.

Deviating test pressures shall be specified between the manufacturer and purchaser.

Copyright Deutsches Institut Fur Normung E.V.

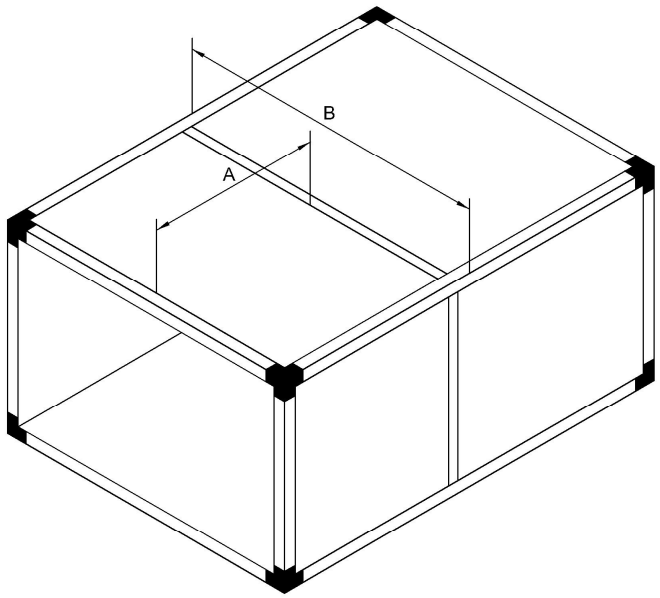

Key
A Panel deflection
B Frame deflection

Figure 2 — Illustration of panel and frame spans of air handling units

The ability of the real unit to withstand the maximum designed fan pressure may be demonstrated by prior agreement between the manufacturer and purchaser, by blanking off the inlets to the unit and running the fan up to its design operating speed. Downstream sections of blow-through units shall be proved by blanking off the air handling unit's outlets.

Any special requirements, for example the ability to survive shock loading caused by sudden closure of fire dampers, should be clearly specified.

Copyright Deutsches Institut Fur Normung E.V.

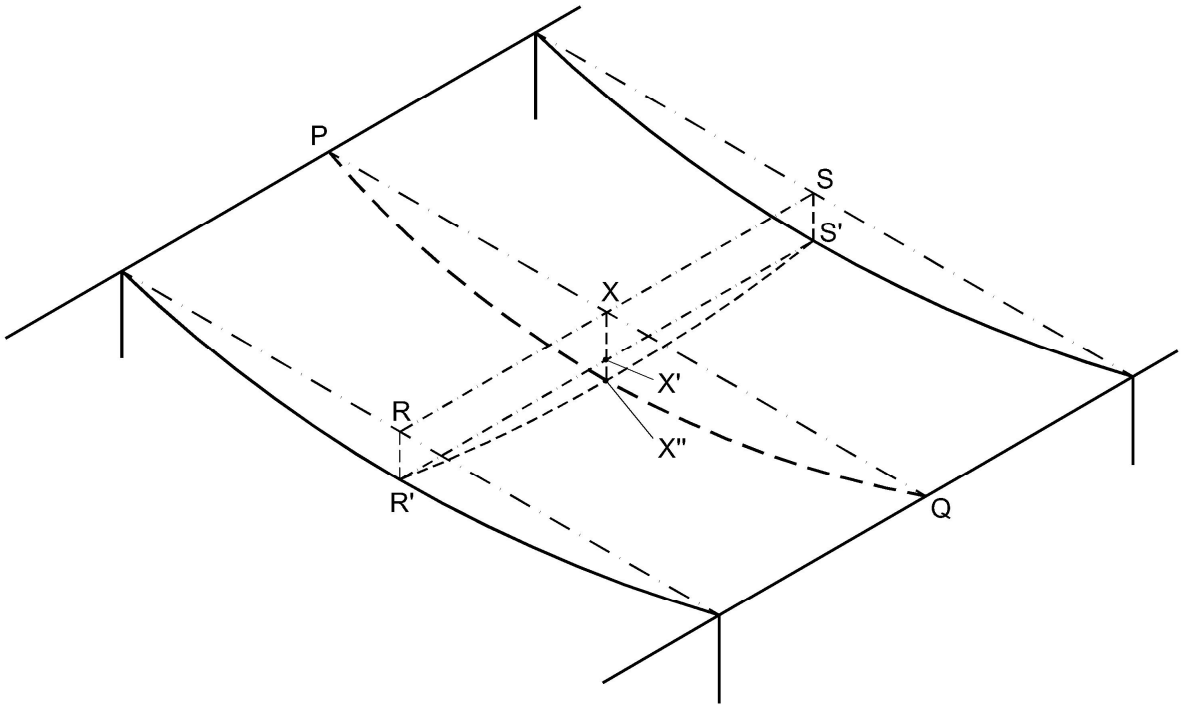

Figure 3 — Deflection of panels and frames of air handling units

5.2 Testing

Deflection shall be measured within an accuracy of ± 0,5 mm whilst the air handling unit is operating under test conditions. For example, referring to Figure 3, deflection X'X" is measured for span R'S', deflection XX" is measured for span PQ.

Deflection X'X" is a function of panel stiffness. Deflection XX" is a function of both frame and panel stiffness. Frame deflection is RR' and SS'.

EXAMPLE

PQ = 2m

R'S' = RS = 1 m

Measured deflection XX" = 8 mm

Measured deflection X'X" = 5 mm

Copyright Deutsches Institut Fur Normung E.V.

Hence, the deflection of span R'S' is 5 mm × m^{-1} and that of span PQ is 4 mm × m^{-1}. The class is determined by the highest value of the measured relative deflections.

In this example the deflection of R'S' (the shortest span) determines that class D2 is met.

6 Casing air leakage

6.1 Requirements and classification

The leakage test shall be done after the strength test.

6.1.1 Units operating under negative pressure only

The air leakage of the assembled air handling unit shall be tested at 400 Pa negative pressure and it shall not exceed the applicable rate given in Table 4.

Table 4 — Casing air leakage classes of air handling units, 400 Pa negative test pressure

Leakage class of casing	Maximum leakage rate (f_{400}) $l \times s^{-1} \times m^{-2}$	Filter class (EN 779)
L1	0,15	superior to F9
L2	0,44	F8 to F9
L3	1,32	G1 to F7
NOTE The maximal leakage rates given in Table 4 are according to the ductwork leakage classes specified in EN 1507 and EN 12237, (e.g. L2 = B), but the test pressures are different.		

NOTE Class L1 for units for special application e.g cleanrooms.

In the case of units tested at a pressure deviating from 400 Pa the measured leakage rate shall be converted into a value at reference pressure, using the following formula:

$$f_{400} = f_m \left(\frac{400}{\text{test pressure}} \right)^{0,65} \quad (1)$$

where:

f_m is the measured leakage rate at the actual test pressure;

f_{400} is the converted leakage rate at 400 Pa , see Table 4.

Unless otherwise specified, the applicable rate shall be a function of the efficiency of the air filters within the air handling unit. Where there is more than one stage of air filtration, the classification shall be based on the efficiency of the highest grade of filter.

NOTE For special applications by agreement, leakage class may be chosen independent from the filter class. Even if the unit is not equipped with filters, class L3 is still recommended.

Copyright Deutsches Institut Fur Normung E.V.

6.1.2 Units operating under both negative and positive pressure

Air handling units with sections operating under positive pressure shall, in all cases, have the positive pressure sections tested separately from the rest of the unit where the operating pressure immediately downstream of the fan exceeds 250 Pa positive pressure. If the positive pressure does not exceed 250 Pa, a negative pressure test shall be sufficient. The test pressure applied to the positive pressure sections shall be 700 Pa positive pressure or the air handling unit's maximum positive operating pressure, whichever is the greater. The remainder of the unit shall be tested in accordance with 6.1.1, with the applicable leakage rate being governed by the efficiency of the filter immediately upstream of the fan. It is also allowed to test the entire unit under positive and negative pressure.

The air leakage from the sections subjected to 700 Pa positive pressure shall be in accordance with Table 5.

Table 5 — Casing air leakage classes of air handling units, 700 Pa positive test pressure

Leakage class of casing	Maximum leakage rate (f_{700}) $l \times s^{-1} \times m^{-2}$
L1	0,22
L2	0,63
L3	1,90
NOTE Class L1 for units for special application e.g cleanrooms.	

In the case of units tested at a pressure deviating from 700 Pa the measured leakage rate shall be converted into a value at reference pressure, using the following formula:

$$f_{700} = f_m \left(\frac{700}{\text{test pressure}} \right)^{0,65} \qquad (2)$$

where

f_m is the measured leakage rate at the actual test pressure;

f_{700} is the converted leakage rate at 700 Pa , see Table 5.

Air leakage tests on model boxes shall be performed at both 400 Pa negative pressure and 700 Pa positive pressure.

6.2 Testing

6.2.1 Test apparatus

The test apparatus shall be as shown in Figure 4, using a fan with a duty at least capable of meeting the anticipated leakage rate at the respective test pressure(s).

If the air handling unit is too large for the capacity of the leakage test apparatus (accuracy ± 3,0 %), or a restriction of access for delivery requires that the unit should be tested in sections or sub-assemblies, the breakdown should be agreed by the manufacturer and purchaser prior to the test date.

Copyright Deutsches Institut Fur Normung E.V.

Where heat recovery devices are installed, the supply and extract sections shall be tested together as a single unit.

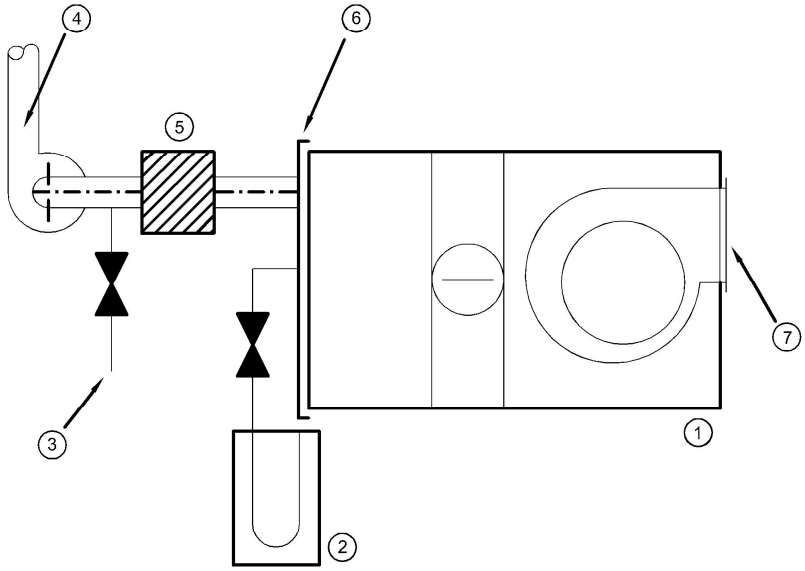

Key

1 AHU under test
2 AHU test pressure gauge
3 Bleed valve as alternative to variable speed fan
4 Variable speed fan
5 Flow measurement device
6 Inlet plate
7 Outlet plate

Figure 4 — Apparatus for testing the casing air leakage (negative pressure test). Typical example

6.2.2 Preparation for test

The unit to be tested shall be put up in the plane in which it is intended to operate with its sections connected or joined by the method given in the installation instructions.

Copyright Deutsches Institut Fur Normung E.V.

Where it is necessary to fit blanking plates, the plates shall be fitted by a similar method to that of the intended installed joint.

Openings for electrical, air or water services shall be closed prior to testing. Dampers shall be dismounted before testing or fitted with blanking plates if the damper is inside.

The air handling unit shall not incorporate any additional sealing over that of the standard product or, where applicable, of the agreed specification.

6.3 Test procedure

Turn on the test apparatus fan unit and adjust until the static test pressure inside the test unit is within 5 % of the specified figure.

Keep this pressure constant for 5 minutes, and do not record any readings until the pressure has stabilised.

Record the leakage flow rate and the test pressure.

6.4 Determination of allowable leakage rates

Calculate the casing surface area from the nominal external dimensions, including the area of the blanked inlet and outlet airflow aperture. The area of components which does not form part of the airtight casing shall be excluded, as well as the area of blanking plates on openings of separately tested unit sections.

Leakage results obtained from test pressures deviating from the specified standard test pressure (maximum deviation ± 5 %), shall be converted into leakage rates in accordance with the test pressure classifying the leakage class in Table 4 and/or 5.

Determine the maximum allowable leakage from Tables 4 and 5, as appropriate, and relate it to the casing area of the unit under test.

The unit shall be deemed passable if the recorded leakage rate is not greater than the allowable leakage rate. If the unit has to be tested in sections, the total sum of the recorded leakage rates for all sections shall be the basis for pass or fail.

7 Filter bypass leakage

7.1 Requirements

7.1.1 General

Air bypass around filter cells will decrease the effective efficiency of the filter, especially a high efficiency one, because the bypass air is not filtered. In addition, any inward leakage through the casing downstream of the filter has the same effect. Therefore for filters located upstream of the fan, the air tightness and area of the casing between the filter and the fan are factors that can affect the filter bypass leakage rate.

7.1.2 Acceptable filter bypass leakage rates

Table 7 gives the acceptable filter bypass leakage rate, related to different filter classes, as percentages of the specified or nominal air flow rate of the air handling unit to be tested. If the filter is upstream of the fan, leakages of the sections between the filter and fan are deemed to be included in the specified values. In the case of downstream filters the specified values are for the bypass around the filter only.

Copyright Deutsches Institut Fur Normung E.V.

The acceptable filter bypass leakage rate q_{va} is specified by the formula:

$$q_{va} = k \times q_{vnom} / 100 \quad (3)$$

where

q_{vnom} is the air flow rate of the filter section, see Table 6;

k is the filter bypass leakage rate, in percent of specified or nominal volume flow rate, see Table 7.

Table 6 — Air flow rate of the filter section (q_{vnom}) subject to the kind of unit

Test criteria	Kind of unit	
	Model box (M)	Real unit (R)
Volume flow rate	Corresponds to a filter face velocity of 2,5 m/s (e.g. 0,93 m³/s at 610 × 610 mm)	Normal operating conditions at selected design fan speed

Table 7 — Acceptable filter bypass leakage, 400 Pa test pressure

Filter class	G1 to F 5	F 6	F 7	F 8	F 9
Maximum filter bypass leakage rate *k* in % of the volume flow rate	6	4	2	1	0,5

Tabulated percentages represent the leakage of unfiltered air.

— Unfiltered air for filters located upstream the fan is considered to be the bypass leakage around the filter cells plus the casing air leakage of the sections between the filter and the fan.

— Unfiltered air for filters located downstream the fan is considered to be the bypass leakage around the filter cells only.

The unit shall be deemed to pass if the specified value for the filter bypass leakage rate, determined in 7.2, is no greater than the acceptable filter bypass leakage rate q_{va}.

7.1.3 Two or more filter sections in the same unit

If two or more filter sections are provided within the air handling unit, the filter bypass leakage shall be tested separately for each filter.

7.2 Testing

7.2.1 General

The specified test requirements refer to the complete air handling unit.

Copyright Deutsches Institut Fur Normung E.V.

The filter cells shall be removed and replaced with blanking plates, e.g. as shown in Figure 5. These plates shall have exactly the same shape, dimensions and surface quality as the filter cell in the area relevant to air tightness.

Alternatively, the inlet face of every individual filter cell may be covered with a plate or a foil.

The joints between the filter cells and frames shall not be covered and any additional fastenings of plates, foils shall not have any influence on the air tightness of the joints.

Openings for electrical, air or water services shall be closed prior to testing.

The accuracy of the measuring device for the leakage airflow shall be ± 3,0 %.

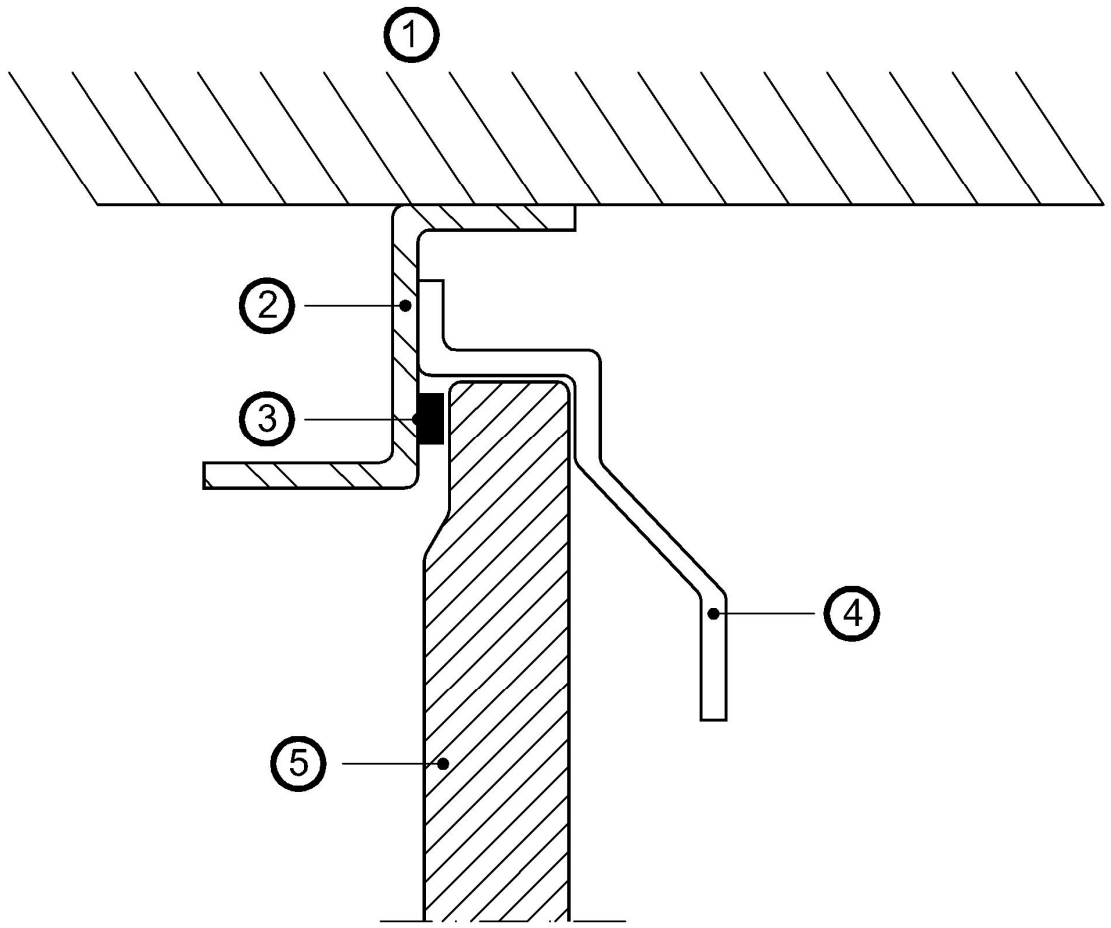

Key
1 Casing wall
2 Frame
3 Sealing
4 Fastener of filter cell
5 Plate

Figure 5 — Method of blanking off filter cells

Copyright Deutsches Institut Fur Normung E.V.

7.2.2 Filters downstream of the fan (positive pressure)

For testing, the inlet opening of the test filter section shall be covered with an airtight plate. A leakage test apparatus shall be connected as shown in Figures 6 and 7. The outlet opening for the test filter shall be open.

The test shall be carried out in two stages at a positive test pressure of 400 Pa.

First stage: Determination of the total leakage q_{Lt}

The total leakage is specified by the formula:

$$q_{Lt} = q_L + q_{Lf} \tag{4}$$

where

q_{Lt} is the total leakage;

q_L is the sum of leakages through the casing;

q_{Lf} is the sum of leakages through the joints between the filter cell, the frame and the casing.

Measurement of the total leakage shall be carried out with blanking plates, replacing or covering each individual filter cell in the filter section; as described in 7.2.1.

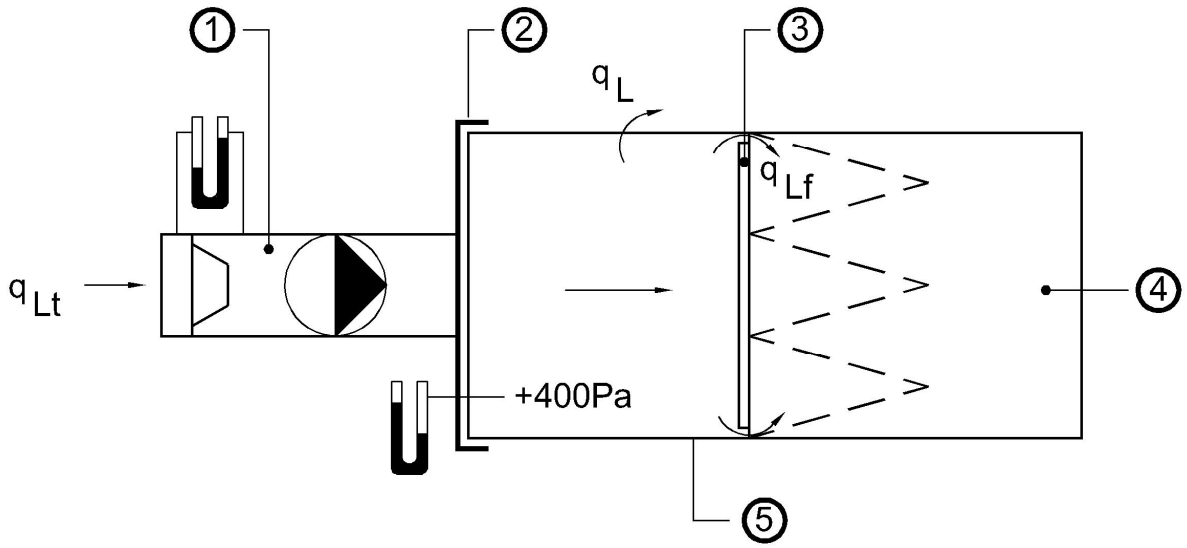

Key
1 Leakage test apparatus
2 Inlet plate
3 Filter cells replaced by blanking plates or individually covered with a plastic foil
4 Filter section
5 Casing

Figure 6 — Test apparatus for testing filter sections downstream of the fan – first stage

Copyright Deutsches Institut Fur Normung E.V.

Second stage: Determination of the leakage through the casing q_L

Air leakage through the casing shall be determined by eliminating all possible bypass leakage through the framework around the filter cells. Therefore the entire frontal face area of filter frames and filter cells shall be blanked off, including the filter frames adjoining the casing panels.

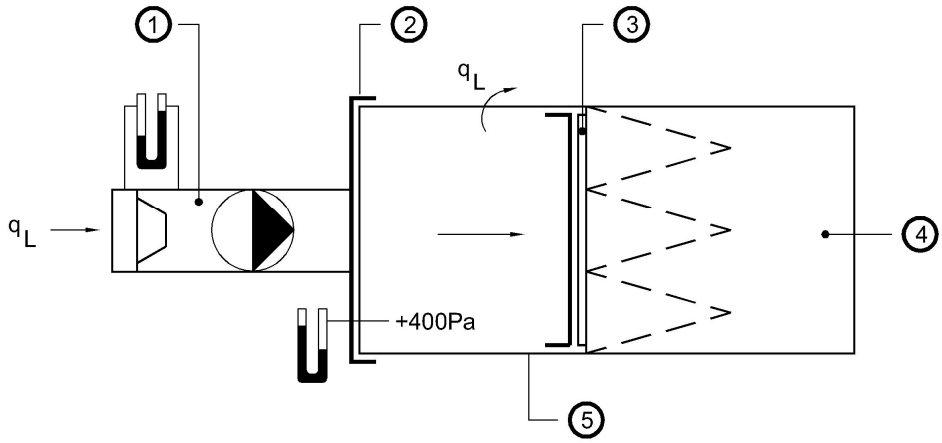

Key
1 Leakage test apparatus
2 Inlet plate
3 Filter cells and filter frame blanked off
4 Filter section
5 Casing

Figure 7 — Test apparatus for testing filter sections downstream of the fan – second stage

Copyright Deutsches Institut Fur Normung E.V.

The value used to calculate the leakage is specified by the formula:

$$q_{Lf} = q_{Lt} - q_L \qquad (5)$$

where

q_{Lf} is the sum of leakages through the joints between the filter cell, the frame and the casing;

q_{Lt} is the total leakage;

q_L is the sum of leakages through the casing.

7.2.3 Filters upstream of the fan (negative pressure)

For testing, the outlet opening of the section, which is downstream of the filter under negative pressure, shall be covered with an airtight plate.

A leakage test apparatus shall be connected as shown in Figure 8. The inlet opening of the test filter section shall be open.

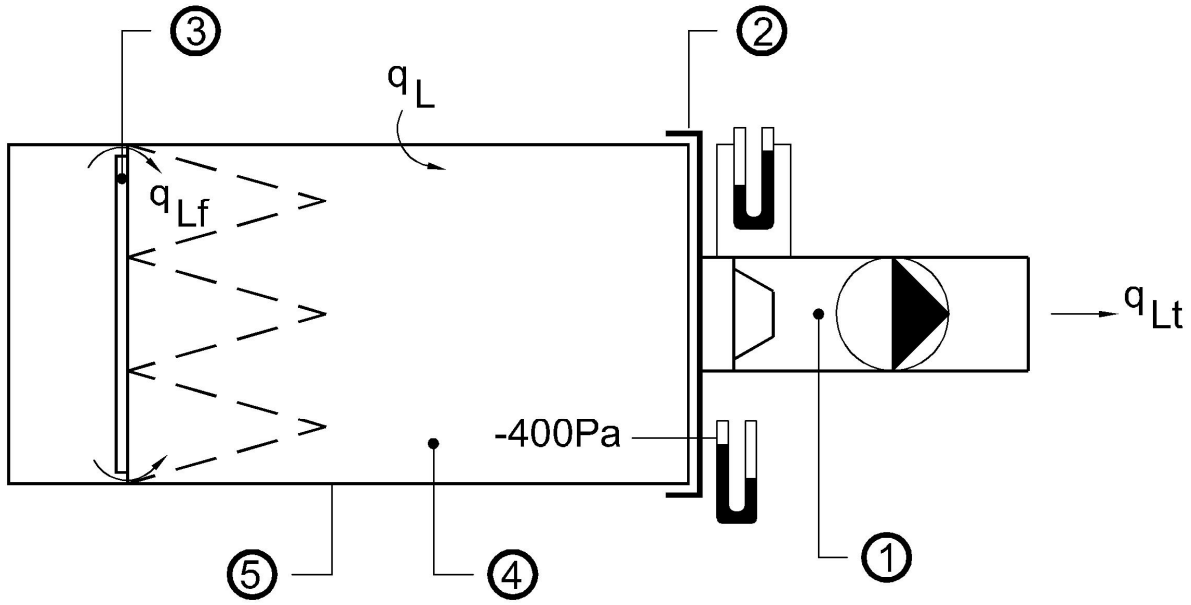

Key
1 Leakage test apparatus
2 Outlet plate
3 Filter cells replaced by blanking plates or individually covered with a plastic foil
4 Filter section
5 Casing

Figure 8 — Test apparatus for testing filter sections upstream of the fan

The following steps shall be added if there is a heat recovery section between the filter and the fan. Connect a pressurisation fan to one airside opening of the unit part which does not contain the filter to be tested and close all other openings. A second fan shall be connected on the discharge side of the part that contains the filter frame to be tested. Regulate the negative pressure downstream filter to 400 Pa and the pressure difference between the two airsides to ± 5 Pa.

Copyright Deutsches Institut Fur Normung E.V.

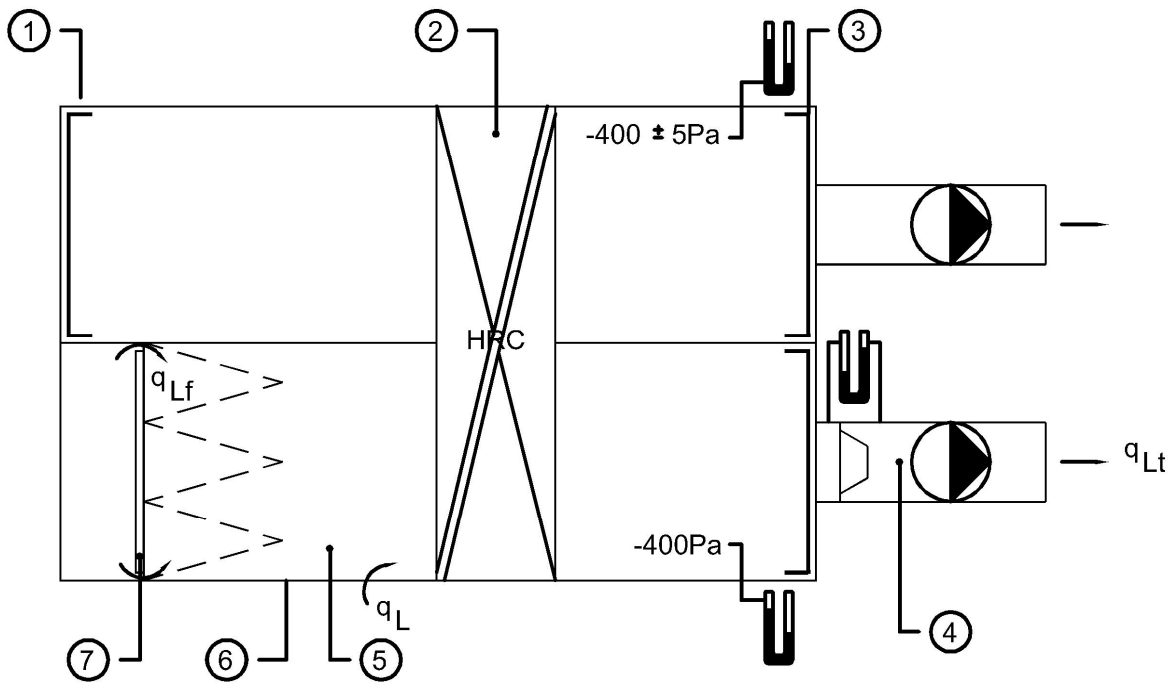

Key
1 Inlet plate
2 Heat recovery device
3 Outlet plate
4 Leakage test apparatus
5 Filter section
6 Casing
7 Filter cells replaced by blanking plates or individually covered with a plastic foil

Figure 9 — Test apparatus for testing filter sections with heat recovery section

The test shall be carried out at a negative test pressure of 400 Pa.

The total leakage is specified by the formula:

$$q_{Lt} = q_L + q_{Lf} \qquad (6)$$

where

q_{Lt} is the total leakage;

q_L is the sum of leakages through the casing;

q_{Lf} is the sum of leakages through the joints between the filter cell, the frame and the casing.

This is the value to calculate the filter bypass leakage rate.

Filter frames in model boxes shall be tested both as filter sections downstream (positive pressure) and upstream (negative pressure) of the fan. The bypass test under positive pressure shall also be conducted in two stages as described in 7.2.2 in order to eliminate the casing leakage. For a non–ambiguous interpretation of figures, only the bypass leakage across the filter frame shall be specified.

Copyright Deutsches Institut Fur Normung E.V.

EXAMPLE

A test was performed for a filter section with 4 filters.

Surface section area: 1,49 m^2

Face velocity: 2,5 $m \times s^{-1}$

Air flow rate: 3,725 $m^3 \times s^{-1}$

The following values were determined:

a) Testing filter sections downstream of the fan (positive pressure)

Total leakage q_{Lt}: $27{,}5 \times 10^{-3}$ $m^3 \times s^{-1}$

Leakage through the casing q_L: $14{,}5 \times 10^{-3}$ $m^3 \times s^{-1}$

Leakage through the filter q_{Lf}: $13{,}0 \times 10^{-3}$ $m^3 \times s^{-1}$

Filter bypass leakage rate: 0,35 %

Usable filter class: F9

b) Testing filter sections upstream of the fan (negative pressure)

Total leakage q_{Lt}: $24{,}5 \times 10^{-3}$ $m^3 \times s^{-1}$

Leakage of unfiltered air q_{Lf}: $24{,}5 \times 10^{-3}$ $m^3 \times s^{-1}$

Filter bypass leakage rate: 0,66 %

Usable filter class: F8

8 Thermal performance of casing

8.1 General

This test procedure provides the means for classifying the thermal transmittance of an air handling unit using a test enclosure with standard construction features.

The test is also used to provide a measure of thermal bridging associated with the structural design.

8.2 Requirements and classification

8.2.1 Thermal transmittance

The thermal transmittance, U($W \times m^{-2} \times K^{-1}$), shall be determined when the steady state temperature difference is 20 K. Under these conditions, the value of U shall be classified in accordance with Table 8. The area used for the purposes of calculating the U value shall be that of the external surface of the casing (without a base frame and roof overhang e.g. as integral part of weatherproof units).

Copyright Deutsches Institut Fur Normung E.V.

$$U = \frac{P_{el}}{A \times \Delta t_{air}} \quad (7)$$

where

P_{el} is the electrical power input for heater and circulating fans;

A is the external surface area;

Δt_{air} is the air-to-air temperature difference, $\Delta t_{air} = t_i - t_a$;

t_i is the mean internal air temperature;

t_a is the mean external air temperature.

Table 8 — Classification of thermal transmittance *U* of the casing of air handling units

Class	Thermal transmittance (*U*) $W \times m^{-2} \times K^{-1}$
T1	$U \leq 0,5$
T2	$0,5 < U \leq 1,0$
T3	$1,0 < U \leq 1,4$
T4	$1,4 < U \leq 2,0$
T5	No requirements

8.2.2 Thermal bridging

Under the test conditions, when the mean temperature difference between internal and external temperatures is stabilised at 20 K, the lowest value of temperature difference between any point on the external surface and the mean internal air temperature shall be established. The ratio between the lowest temperature difference and the mean air-to-air temperature difference determines the thermal bridging factor.

Determine the thermal bridging factor k_b as follows:

$$k_b = \Delta t_{min} / \Delta t_{air} \quad (8)$$

where

Δt_{min} is the least temperature difference, $\Delta t_{min} = t_i - t_{smax}$;

Δt_{air} is the air-to-air temperature difference, $\Delta t_{air} = t_i - t_a$;

t_i is the mean internal air temperature;

t_a is the mean external air temperature;

t_{smax} is the maximum external surface temperature.

Copyright Deutsches Institut Fur Normung E.V.

The thermal bridging factor k_b of the casing shall be graded in accordance with Table 9.

Table 9 — Classification of thermal bridging factor of the casing

Class	Thermal bridging factor (k_b)
TB1	$0,75 < k_b < 1,00$
TB2	$0,60 \leq k_b < 0,75$
TB3	$0,45 \leq k_b < 0,60$
TB4	$0,30 \leq k_b < 0,45$
TB5	No requirements

NOTE Any accessible surface which is exposed to the air outside the enclosure is considered an external surface. In classes TB3 and TB4, however, 1 % of the external surface may have a lower thermal bridging factor, due to screws, hinges etc. A thermal bridging class corresponds to a variation of 3 °C of maximal surface temperature at a 20 K temperature difference (maximum uncertainty in surface temperature measurement is ± 0,2 K).

Values for real units may deviate due to air leakage and external air movement. Nevertheless, this grading can be used as a guide since the lower the value of k_b, the greater the likelihood that condensation will form on those parts of the unit where low air temperatures may be met.

8.3 Testing

8.3.1 General

The principal requirement for the classification of thermal transmittance of air handling units is that the enclosure tested reproduces closely the design and quality of construction that is typical for the range of products represented.

8.3.2 Test facility

All test criteria in accordance with table 1 shall be checked with the same test facility.

An enclosure (model box) shall be made with the type of design and method of assembly that is to be used by the manufacturer in normal production. Different designs shall not be combined in one enclosure. If more than one type of construction or assembly method is available, the construction adopted for each test shall be clearly stated by the manufacturer.

The means of building the assembly, including the torque applied to fixings, shall be in accordance with normal manufacturing procedures and standards for the product range. The enclosure shall be designed taking account of the following specifications:

— height and width shall have external dimensions of between 0,9 m and 1,4 m.

— total external surface area shall be between 10 m² and 30 m².

The enclosure shall reproduce an assembly of at least two sections of a unit joined in accordance with the normal methods for the design under test.

Copyright Deutsches Institut Fur Normung E.V.

The operating side of each section shall have at least one access door (with hinges and standard closures, but with no window), and shall include at least one fixed panel. Every construction detail of the real unit shall be included in the model box (e.g. doors, mullions, panels).

Screws shall be tightened as in normal production.

A filter frame (without the filter medium) shall be installed while all measurements are taken, allowing filter bypass leakage to be measured. The filter frame shall be placed away from the section joints so that negative pressure impinges on the joint during the casing leakage test. This enables the effect of the joint on casing air leakage to be taken into account. If the test is executed without a filter frame, this is to be noted separately in the test report.

Weatherproof units shall not be covered (e.g. with a roof or roofing membrane) when the thermodynamic values are determined.

If an air handling unit enclosure is used, any internal fittings, such as filters or coils, shall be removed, except for the filter holder. The assembly shall be supported by insulating blocks, with the bottom or the base frame of the enclosure 300 mm to 400 mm above the floor of a draught-free room (air flow velocity less than 0,1 m $\times$ s^{-1}). The total area of the insulating blocks shall be not greater than 5 % of the air handling unit base area.

No radiant heat shall enter the test environment.

The following shall be mounted inside the enclosure:

— one or more electric heater elements, controllable externally;

— one or more circulating fans with a total free air volume performance equivalent to 100 air changes per hour to 110 air changes per hour, allowing the internal air temperature difference across the measurement points to not be greater than 2,0K. The test equipment assembly inside the unit shall not influence the heat transmission of the casing. Annex A gives examples of these arrangements.

The enclosure shall be divided equally lengthwise into three measurement sections.

Sixteen temperature measuring devices shall be installed inside the enclosure; one in each corner and at the corners of each section division, each 100 mm from the side panels.

All air temperature measuring devices used inside and outside of the enclosure, shall be protected against thermal radiation. The accuracy of the air temperature measuring devices used shall be $\pm$ 0,1 K and the accuracy of the surface temperature measuring devices used shall be $\pm$ 0,2 K.

The external air temperature shall be measured at points 0,25 m from the centre of the top, bottom and all four vertical sides of the enclosure.

Copyright Deutsches Institut Fur Normung E.V.

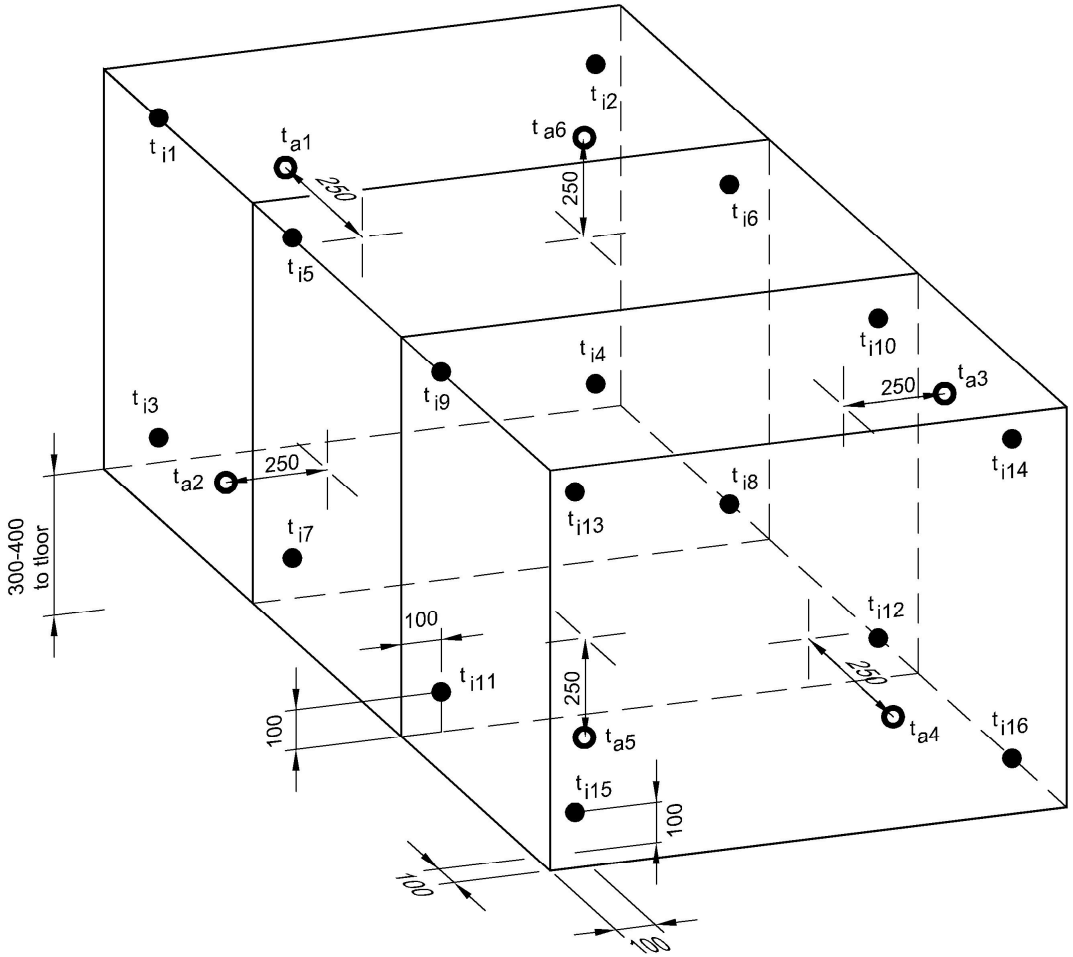

Figure 10 — Zoning and installation of measuring devices, dimensions in millimetres

8.3.3 Testing procedure

Energise the heaters and the fans from a stable electrical power supply and keep the voltage constant until measurements show that steady-state conditions have been reached with regard to the difference between the mean internal and external temperatures. Both sets of measurements (mean internal/mean external temperature) shall yield a standard deviation not exceeding 1,0 K during a period of 30 minutes.

During measurement, the temperature difference across the measurement points inside shall not exceed 2,0 K nor shall the difference between the three mean temperature measurements in the inner zones exceed 0,5 K. The difference between the outside temperature at measuring points shall not exceed 0,5 K.

The power input from the heaters and fans when the difference between the internal and external temperatures are at least 20 K shall be used to determine thermal transmittance *U*. Accuracy for power measurement instrument shall be ± 1 % of the measured value.

The thermal bridging factor, k_b, shall be determined under stable test conditions by taking the mean internal temperature measured at the eight points limiting each section, together with the maximum outside temperature, and calculating the least favourable k_b value for each zone. The lowest value for the three sections shall be taken as the k_b value, which defines the temperature class. The diameter

Copyright Deutsches Institut Fur Normung E.V.

of surface temperature measuring instrument shall be 7mm to 9mm, and the maximum uncertainty of temperature measurement shall be ± 0,2 K..

NOTE Infrared imaging can assist in locating the maximum external temperatures.

8.3.4 Evaluation of the test results

For the derivation of the thermal transmittance U, and thermal bridging factor k_b, the following calculation procedure shall be taken into account.

Terms in the applicable equations (either measured or calculated) shall be rounded off (final figure less than 5 is eliminated and a final figure of 5 or greater increases the preceding figure to its next highest value) to the number of decimal places as specified below:

P_{el}	[Watt]	: 1 decimal
A	[m^2]	: 2 decimals
Δt_{air}	[K]	: 1 decimal
Δt_{min}	[K]	: 1 decimal
t_i	[ºC]	: 1 decimal
t_a	[ºC]	: 1 decimal

To calculate an average temperature, readings with more decimals may be used:

— rounded off terms shall be used in the relevant formulas to calculate the U value and k_b factors.

— calculated figures for thermal transmittance and thermal bridging factors shall be rounded off to two decimal places.

9 Acoustic insulation of casing

9.1 General

This procedure provides a way of determining the approximate sound insertion loss value D_p of a test enclosure.

9.2 Test requirements

A model box shall be made with the type of design and method of assembly, in accordance with 8.3.2.

9.3 Test method

The test method shall be the artificial source method described in EN ISO 11546-2, conducted in accordance with EN ISO 3744 or EN ISO 3743.

The sound pressure insulation performance (casing insertion loss) shall be calculated in accordance with EN ISO 11546-2 and reported for octave bands 125 Hz to 8 000 Hz.

Inside the enclosure, a sound source, designed to prevent vibration to the floor, shall be resiliently mounted in two successive positions. The source shall not be positioned at less than 0,2 × d of each wall, where d is the smallest inside size of the enclosure.

Copyright Deutsches Institut Fur Normung E.V.

9.4 Test procedure

Get the sound source in the first position in the enclosure and measure the octave sound pressure levels in octave bands from 125 Hz to 8000 Hz in the surrounding of the model box, in the specified microphone positions according to the enveloping surface method, described in EN ISO 3744 or EN ISO 3743 methods. Determine the logarithmic mean sound pressure level $\overline{L}_{\mathrm{p}}^{\mathrm{E1}}$.

Then move the sound source to the second position and make another measurement to obtain the logarithmic mean sound pressure level $\overline{L}_{\mathrm{p}}^{\mathrm{E2}}$.

Apply the background noise correction for each sound pressure:

$$\overline{L}'^{Ei}_{\mathrm{p}} = 10\lg\left(10^{\left(\overline{L}_{\mathrm{p}}^{Ei}/10\right)} - 10^{\left(\overline{L}_{\mathrm{p}}^{\mathrm{bg}}/10\right)}\right) \tag{9}$$

where

$\overline{L}_{\mathrm{p}}^{\mathrm{bg}}$ is the averaged background noise level;

$\overline{L}_{\mathrm{p}}'^{\mathrm{Ei}}$ is the corrected sound pressure level for source's position Ei.

Determine the mean sound pressure level of the sound source with enclosure by an arithmetic mean of the two measurements (for each octave band):

$$\overline{L}'^{E}_{\mathrm{p}} = \frac{1}{2}\left(\overline{L}'^{E1}_{\mathrm{p}} + \overline{L}'^{E2}_{\mathrm{p}}\right) \tag{10}$$

where

$\overline{L}_{\mathrm{p}}'^{\mathrm{E}}$ is the mean sound pressure level of the enclosure containing the sound source (averaged for the two source positions as described above).

Then remove the enclosure and install the sound source in the centre of the former model box position. Measure the averaged sound pressure level $\overline{L}_{\mathrm{p}}^{\mathrm{S}}$. The positions of microphones shall remain the same as for the first set of measurements.

Apply the background noise correction to get $\overline{L}_{\mathrm{p}}'^{\mathrm{S}}$.

Sound insertion loss for each octave band is given by:

$$D_{\mathrm{p}} = \overline{L}'^{S}_{\mathrm{p}} - \overline{L}'^{E}_{\mathrm{p}} \tag{11}$$

where

$\overline{L}_{\mathrm{p}}'^{\mathrm{S}}$ is the mean sound pressure level of the sound source;

9.5 Evaluation of the sound insertion loss D_{p}

Present the D_{p} values between 125 Hz and 8 000 Hz in tabular form as result test.

Copyright Deutsches Institut Fur Normung E.V.

10 Fire protection

10.1 General

In cases where the fire protection requirements and recommendations in the standard contradict with national fire regulations, the latter should be followed.

The inlet and outlet openings of an air handling unit are normally connected to a ductwork, the inlet opening of which often has an air intake opening in the building envelope. The casing of a unit may therefore be considered as a part of the ductwork.

An air handling unit has many functions, and therefore it contains many components which have to be serviced and cleaned, resulting in a complex casing with many joints and inspection doors. It is much more difficult to achieve full fire resistance in the casing of a unit than in a duct. On the other hand, the surface area of a unit in a typical application is very small compared with the area of the entire ductwork. Also, the fan, coils, dampers and other components of a unit form an obstacle to the spreading of fire.

An air handling unit is a complex sub-system which includes many functions and components. For technical and economic reasons, non-metallic materials are frequently used in its construction, which may result in a risk of increased fire load and/or generation of toxic gases in the case of fire. The latter can be critical because there is a connection to the whole or part of the building through the ductwork. It is therefore reasonable to minimise the amount of inflammable materials.

By using suitable filter material and/or implementation of frequent cleaning actions, inflammable deposits within the unit shall be quantitatively limited in such a way that they minimize fire risk.

10.2 Material

There are two options for AHU materials:

Option 1Non-combustible materials (material classes A1 or A2 s1 d0 in accordance with EN 13501-1).

Option 2 Flame resistant materials (material class A2, B, C-s3 d2 in accordance with EN 13501-1).

Option 2 is permissible in case the AHU is separated by fire and smoke dampers. The fire and smoke damper prevents the carry over of smoke and fire spread into the ventilated areas. It does not have to be installed directly at the AHU, or as a part of the unit, it shall be at the penetrations of the fire barrier.

Note Option 1 minimises the amount of inflammable materials.

Normal inflammable materials may be used for coatings with a thickness of not more than 0,5 mm in installed condition (material class E- d2 in accordance with EN 13501-1).

Inflammable materials are permissible, if no requirements exist concerning fire protection.

Inflammable materials are not suitable for applications where:

1 air temperatures exceed 85 °C or
2 excessive deposition of inflammable substances could be expected (e.g. exhaust air handling units for kitchens).

10.3 Sealings for air handling units

The use of small quantities of inflammable materials (material class A2, B, C-s3 d2 or E- d2 in accordance with EN 13501-1) for sealing purposes of the units is permissible.

Copyright Deutsches Institut Fur Normung E.V.

10.4 Locally limited and small construction parts of air handling units

For locally limited construction parts of the AHU and control devices of the ventilation system as well as for small parts, e.g. latches, seals, bearings, wiring, measuring devices, inflammable materials (material class A2, B, C-s3 d2 or E- d2 in accordance with EN 13501-1) may be used.

Outdoor air inlets and exhaust air openings of air handling units shall be arranged in such a way, that fire or smoke will not be transferred into other floors, fire compartments or staircases

Supply air systems shall not transfer smoke into the building. Therefore, the outdoor openings shall be arranged in such a way that smoke cannot be sucked in (e.g. location in a front from non-combustible materials with sufficient distance to openings). If this is not possible, the transmission of smoke over outside air shall be prevented by fire dampers with smoke release mechanisms or by smoke dampers. In case of ventilation systems with circulating air the supply air shall be protected from entrance by smoke from the exhaust air by fire dampers with smoke release mechanisms or by smoke dampers. When responding the smoke release mechanisms the supply air fans shall be switched off.

10.5 Air heaters

Air heaters with rated heating surface temperatures over 160°C shall have a safety thermostat, installed in the down stream airflow, which switches off the heater automatically in case of a measured air temperature over 110 °C. Additionally a flow switch shall be installed that switches off the air heater automatically in case of an insufficient air flow; unless a similar quick reaction is guaranteed by the arrangement of the safety thermostat.

10.6 Filters, contact humidifiers and droplet eliminators of AHU's

In case of filter mediums, contact humidifiers and droplet eliminators made of inflammable materials (material class A2, B, C-s3 d2 or E- d2 in accordance with EN 13501-1), a downstream mounted grid (wire mesh width 20 x 20 mm) or a suitable downstream air conditioning component made of noncombustible materials shall prevent burning parts to be conveyed by the air stream.

10.7 Heat recovery

Fire transmission between exhaust air and supply air in heat recovery systems shall be precluded by proper installation-technical provisions split heat exchange between supply and exhaust air through heat transfer medium, protection of the supply air duct by fire dampers with smoke release mechanisms or by smoke dampers) or by other suitable precautions.

NOTE 1 material classes A1 in accordance with EN 13501-1 = not inflammable (non-combustible)
material classes A2 s1 d0 in accordance with EN 13501-1 = not inflammable (non-combustible)
material class A2, B, C-s3 d2 in accordance with EN 13501-1 = flame resistant
material class E- d2 in accordance with EN 13501-1 = normally inflammable

NOTE 2 Air handling units can sustain smoke extraction until the break down of the AHU, as long as it is not in conflict with the purpose of the shutoff devices against fire transmission (e.g. fire dampers) and the entire system. Air handling units cannot solely fulfil the task of smoke extraction since they do not comply with EN 12101-3 and are not building product certified. Ventilation systems are only suitable for sustainable removal of smoke if ventilation performance, duct system, components, fans, power supply and air handling units have been fire–resistively designed and if the ventilation ducts are not equipped with shut off devices.

11 Mechanical safety

The arrangements for mechanical safety of the fan shall be in accordance with EN ISO 12100-2..

For air handling unit the following requirements shall apply:

Copyright Deutsches Institut Fur Normung E.V.

— all doors, where the fan section or other sections comprising hazardous components like electric heaters, steam coils, hot water coils, unprotected drive motors etc. can be entered, shall only be openable with a tool (e.g. hexagonal wrench) or key.

— sign shall be fitted on the fan section access door(s) warning that the fan shall be isolated and allowed to stop before the door is opened. The warning sign shall be in accordance with EN 61310-1, see Figure 11 as an example.

Lockable maintenance switch shall be placed outside the air handling unit, near the fan section access door.

! Warning !

Before opening doors, the fan must be switched off, isolated and allowed to rundown.

(Two minutes minimum)

Figure 11 — Example of text included in the warning sign for an air handling unit

If one of the above mentioned requirements is not adhered to, guards for the fan inlet(s) and drive(s) on the access side should be mounted.

Doors on positive pressure side of the unit shall have arrangements as a protection against injury on opening access doors (retaining mechanism that can not be deactivated or inward-opening doors).

Doors of other hazardous sections shall also wear a sign in accordance with European directives and Standards, indicating what type of hazard is enclosed

Fan section access doors of units over 1,6 m internal height should have an inspection window (sight glass) and a lighting equipment to enable visual control of the drive(s).

Copyright Deutsches Institut Fur Normung E.V.

Annex A
(informative)
Arrangement and requirements for circulating fans

To achieve the required number of air changes in the model box, 4, 6 or 8 circulating fans should be mounted, depending on the volume and the length of the model box.

4 Fans
Internal volume ≤ 4m^3 and external length ≤ 4m. Figure A.1.

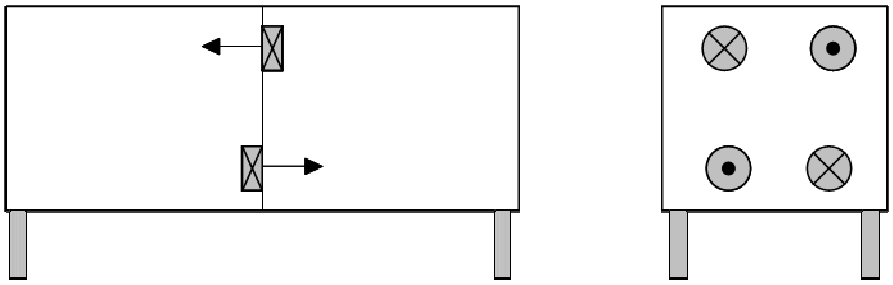

Figure A.1 — Arrangement with 4 fans, principle

6 Fans
Internal volume ≤ 6m^3 and external length ≤ 4m. Figure A.2.

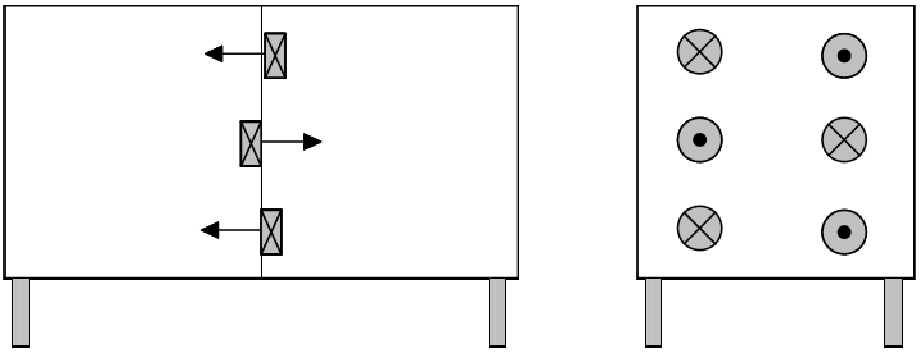

Figure A.2 — Arrangement with 6 fans, principle

❑
8 Fans
Internal volume > 6m^3 or external length > 4m. Figure A.3

Copyright Deutsches Institut Fur Normung E.V.

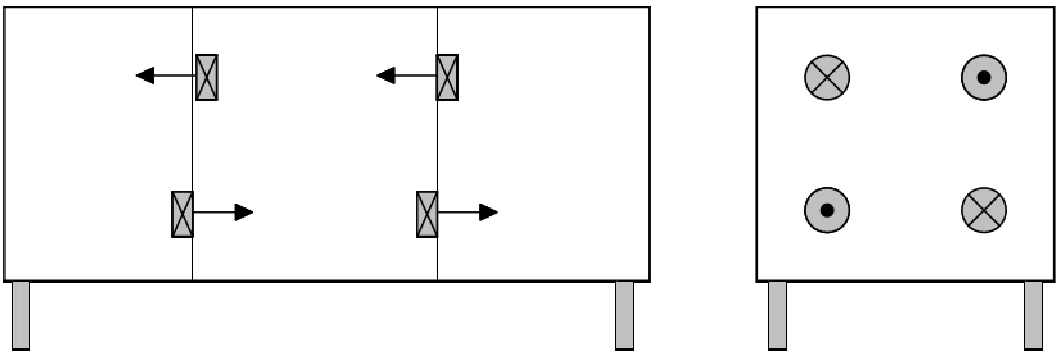

Figure A.3 — Arrangement with 8 fans, principle

Fans should be mounted in a plane (in the middle or between the zones), equally distributed over the cross section of the model box as indicated on the sketches. The boundary of the fan discharge or discharge accessory should coincide with the mounting plane. Air flow directions should be maintained as indicated.

Circulating fans should have a discharge diameter between 150 and 160 mm or be equipped with a transformation piece; terminating in the required discharge diameter.

Outlet velocity across the discharge opening should be uniform ($v_{max} \leq 2.v_{average}$); if necessary a honeycomb filling, straightener (with artificial resistance) or similar has to be applied.

Any fan type of sufficient performance may be used if it meets the specified requirements.

Copyright Deutsches Institut Fur Normung E.V.

Bibliography

[1] EN 12101-3 *Smoke and heat control systems — Part 3: Specification for powered smoke and heat exhaust ventilators*

--`,`,`,`,,`,`,`,`,`,`,`,`,`,`,`,`,`,`,`,`,`,`,`,`,`,`,`,`---

Copyright Deutsches Institut Fur Normung E.V.